ME 360 – H12 Name _____

USE THIS SHEET AS THE FIRST PAGE OF YOUR HOMEWORK SUBMISSION

1) Identify features of involute gear tooth nomenclature.

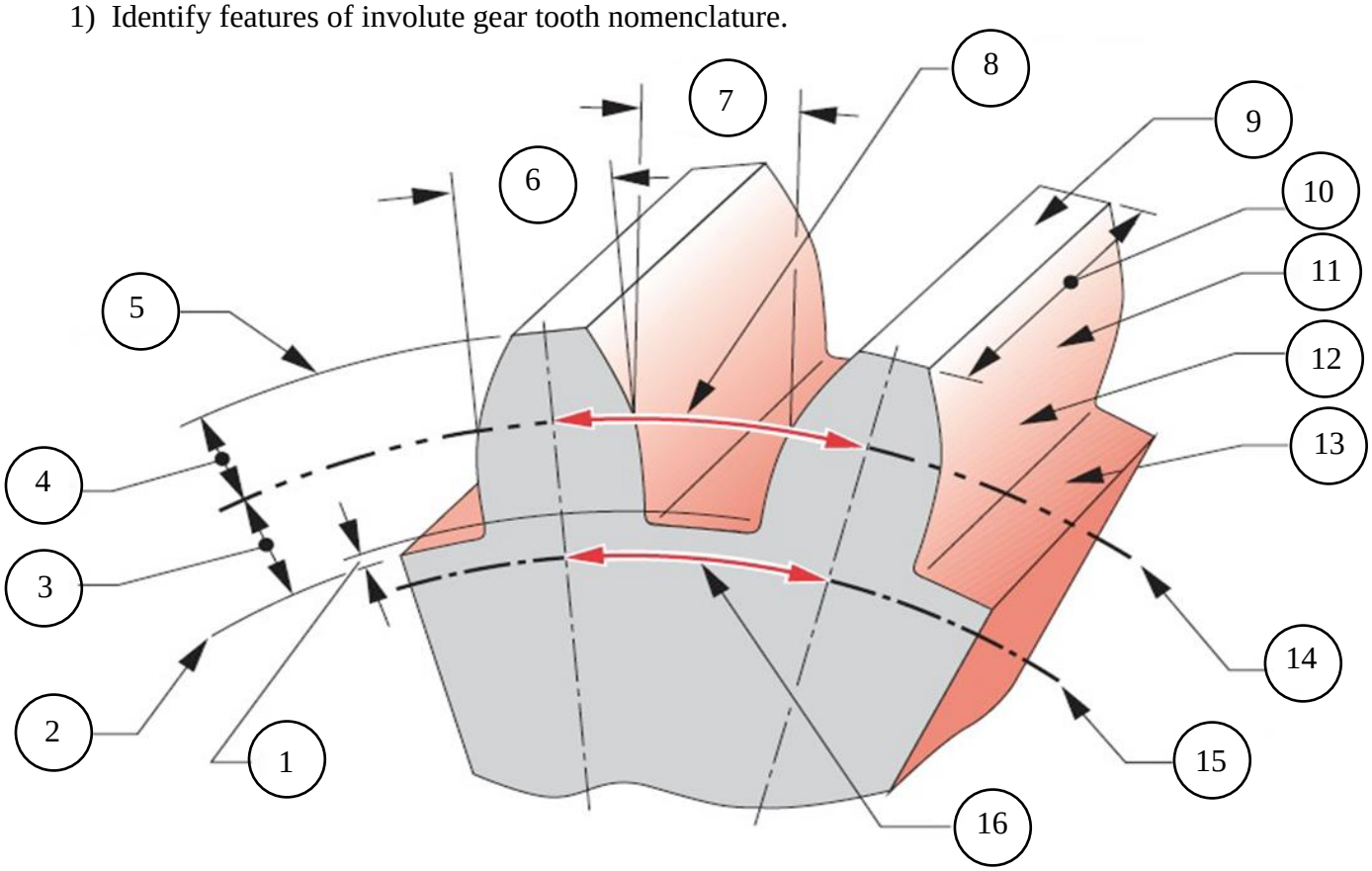

1) _____ 9) _____

2) _____ 10) _____

3) _____ 11) _____

4) _____ 12) _____

5) _____ 13) _____

6) _____ 14) _____

7) _____ 15) _____

8) _____ 16) _____

2) Select a pair of spur gears with standard full-depth 20 degree AGMA teeth that provide an EXACT speed ratio $\omega_2/\omega_3 = 2.5$ and operate at a center distance of approximately 2.2 inches.

a) You must specify integer numbers of teeth for each gear and **standard AGMA diametral pitch p_d**. Your actual center distance must be as close as possible to the design specification requested above and the smaller gear must have at least 15 teeth. **<u>Show your work.</u>**

N_2 _____ N_3 _____ p_d _____ C_{ACTUAL} _____

b) Use "gear_AGMA.xlsx" to determine contact ratio, tip thickness of the pinion and interference. Attach hardcopy of the spreadsheet with your values.

m_p _____ t_{a2} _____ Interference? YES NO

c) What are the minimum inside length and inside height for a rectangular gear box to hold your gear pair?

L_{MIN} _____ H_{MIN} _____

pitch circles for gears 2 and 3

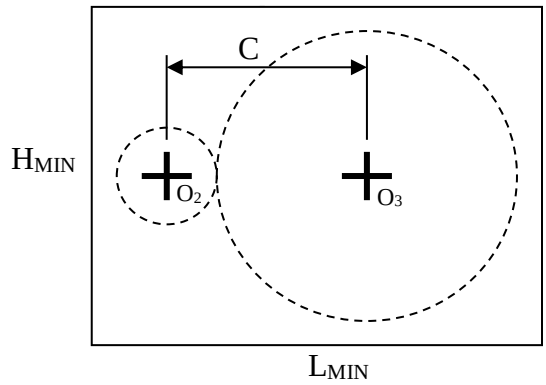

3) The planetary speed reducer shown below is used in a cordless screwdriver and has two identical reduction stages A and B. An exploded view is also provided below.

a) Determine the number of teeth on planet gears 7. N_7 _____

b) Determine the reduction ratio for stage A and the total reduction ratio for the complete reducer.

stage A $\frac{\omega_{10A}}{\omega_{9A}}$ _____ total $\frac{\omega_{10A}}{\omega_{9B}}$ _____

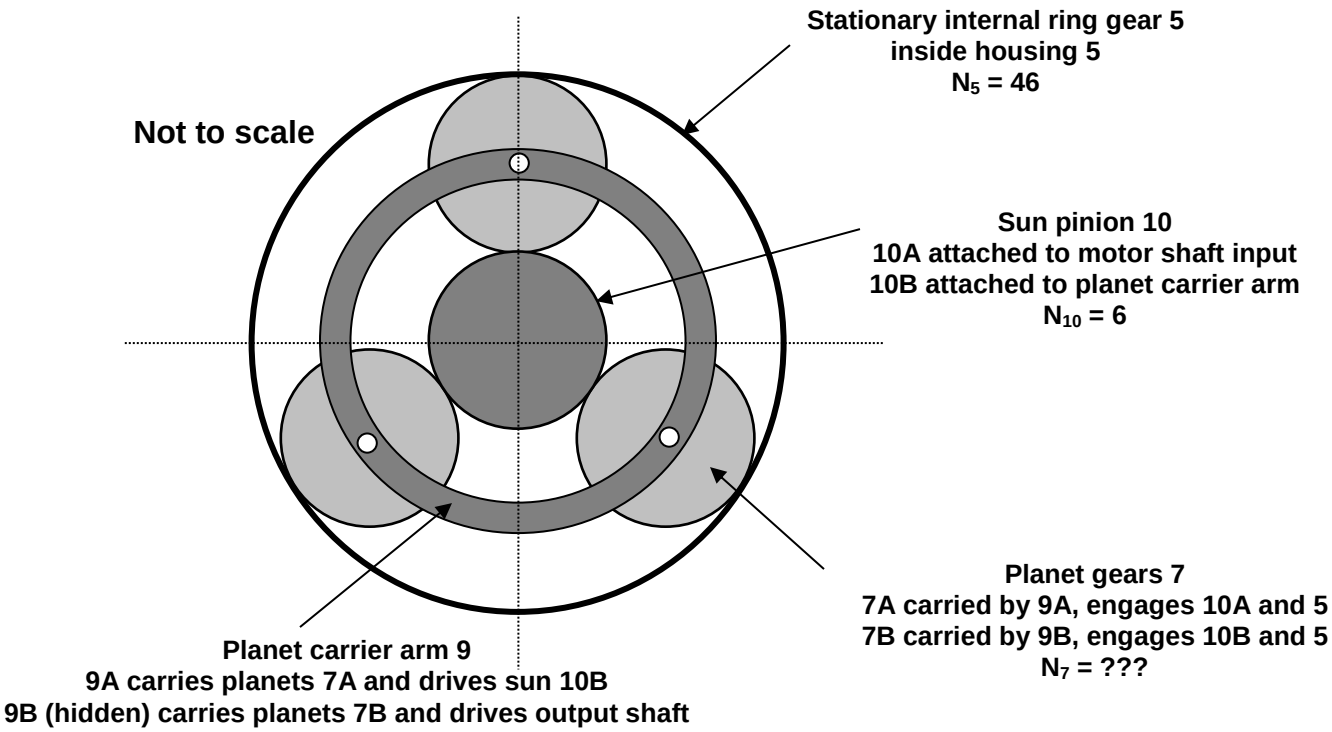

CRAFTSMAN CORDLESS SCREWDRIVER – MODEL NUMBER 135.112110

IMPORTANT!—To assure product SAFETY and RELIABILITY, repairs, maintenance and adjustment should be performed by Sears Service Centers or other qualified service organizations, always using Sears replacement parts.

WHEN ORDERING REPLACEMENT PARTS YOU MUST GIVE UNIT & MODEL NUMBER AS SHOWN ON NAMEPLATE, PLUS PART NUMBER AND NAME OF PART NEEDED.

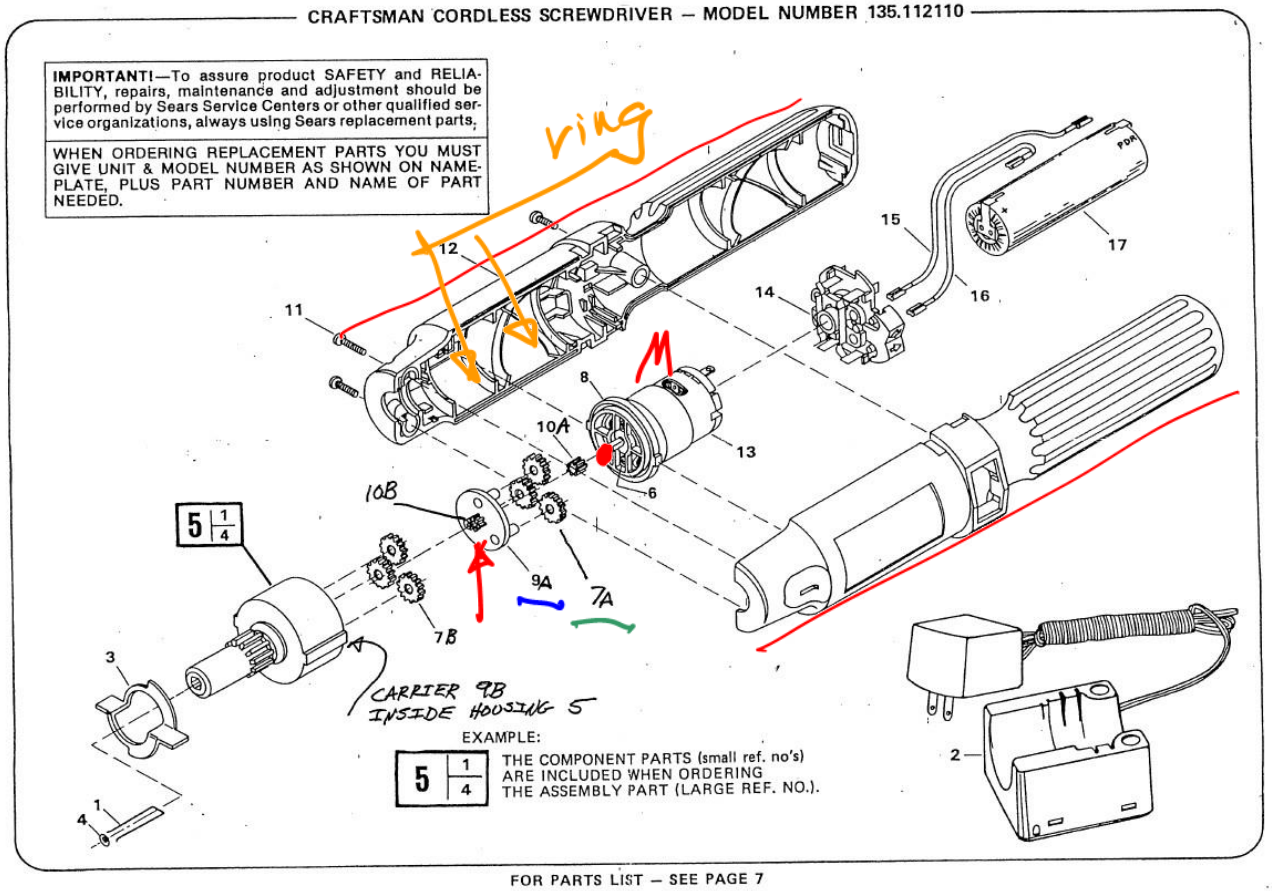

EXAMPLE:

5 1/4 THE COMPONENT PARTS (small ref. no's) ARE INCLUDED WHEN ORDERING THE ASSEMBLY PART (LARGE REF. NO.).

FOR PARTS LIST – SEE PAGE 7