determine p_d (or m) and ϕ for unknown gear

count the number of teeth N

measure OD [inch] - better for even number of teeth, not as accurate for odd number of teeth

assume full depth involute profile $a = \frac{1}{p_d}$

$d = \frac{N}{p_d}$

$p_d = \frac{N}{d}$ $\quad OD = d + 2a = \frac{N}{p_d} + \frac{2}{p_d}$ $\quad p_d = \frac{N+2}{OD}$

p_d must be standard value from Table 12-2

if not, convert to module $m = \frac{d}{N} = \frac{1}{p_d}$ and check Table 12-3

measure tooth tip thickness t_a at addendum with calipers or image analysis

use "gear_AGMA.xlsx" or "gear_metric.xlsx" to calculate t_t for ϕ = 14.5°, 20° and 25°

example

larger Boston gear N = 64 OD= 4.117 inch $p_d = \frac{N+2}{OD} \approx 16.03$ use $p_d = 16$

$t_{a_calipers} = 0.07$ inch $t_{a_14.5°} = 0.0612$ inch $t_{a_20°} = 0.0493$ inch $t_{a_25°} = 0.0371$ inch

smaller Boston gear N = 16 OD= 1.117 inch $p_d = \frac{N+2}{OD} \approx 16.11$ use $p_d = 16$

design a spur gear reducer for 125 HP at 1000 rpm input with $N_{FS} > 2$ for 10 years life

$C \approx 6.65$ in $\quad \omega_P / \omega_G \approx 2.5$ DESIRED

F = face width
Qv = quality number

choose N_P N_G p_d ϕ F Q_V material

choose $\phi = 25°$ heavy load

$p_d = N / d \quad d = N / p_d \quad r = N / 2\, p_d \quad \rho = \omega_p / \omega_g = N_g / N_p \quad N_g = \rho\, N_p$

$C = r_p + r_g = N_p / 2\, p_d + N_g / 2\, p_d = (N_p + N_g) / 2\, p_d \quad 2\, p_d\, C = N_p + N_g = (1+\rho)\, N_{Pp}$

$N_p = 2\, p_d\, C / (1+\rho) \quad N_g = \rho\, N_p$ approximate

p_d	$\sim N_p$	$\sim N_g$
3	11.40	28.50
4	15.20	38.00
5	19.00	47.50
6	22.80	57.00
8	30.40	76.00

2.5 DES 6.65 DES

p_d	N_p	N_g	ρ	r_p	r_g	C	Table 12-12
3	11	28	2.545	1.833	4.666	6.500	J not available
3	11	29	2.636	1.833	4.833	6.667	J not available
4	15	38	2.533	1.875	4.750	6.625	
5	19	47	2.474	1.900	4.700	6.600	
5	19	48	2.526	1.900	4.800	6.700	
6	23	57	2.478	1.917	4.750	6.667	
8	30	76	2.533	1.875	4.750	6.625	

all OK for no tip interference using gear_AGMA.xls

$p_d = 8$ are same size gears but smaller teeth than $p_d = 4$

choose $\boxed{p_d = 6}$ $N_p = 23$ $N_g = 57$ $r_p = 1.917$ in

load analysis

N_p and N_g both odd provides hunting tooth effect

$$\omega_P = \left(\frac{1000\text{ rev}}{\text{min}}\right)\left(\frac{\text{min}}{60\text{ sec}}\right)\left(\frac{2\pi\text{ rad}}{\text{rev}}\right) = 104.72\text{ rad/sec}$$

$$P = T\,\omega \qquad T_p = P / \omega_p = 125\text{ HP}\left(\frac{\text{sec}}{104.72\text{ rad}}\right)\left(\frac{550\text{ ft.lbf}}{\text{HP.sec}}\right)\left(\frac{12\text{ in}}{\text{ft}}\right) = 7878\text{ in.lbf}$$

$T = W_t\, r$ $\quad W_t = T_p / r_p = 4110$ lbf $\quad W_r = W_t \tan\phi = 1917$ lbf ← radial force

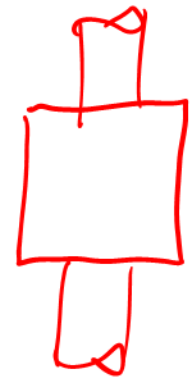

tangential velocity

$$V_t = r_p\, \omega_p = 1.917 \text{ in}\left(\frac{104.72 \text{ rad}}{\text{sec}}\right)\left(\frac{60 \text{ sec}}{\text{min}}\right)\left(\frac{\text{ft}}{12 \text{ in}}\right) = 1004 \text{ ft/min}$$

V_t [fpm]

pitch line vel

recommend $Q_v \geq 8$ $\quad$ Table 12-7 Norton

choose $\quad Q_v = 8$

rule of thumb

choose $\quad F \approx 12 / p_d = 2$ in $\quad$ page 746 Norton 5th ed ($8/p_d < F < 16/p_d$)

$$\sigma_b = \frac{W_t p_d}{F\,J}\frac{K_a K_m}{K_v} K_s K_B K_I \qquad \text{Eq 12.15us Norton}$$

	$N_p = 21$	23	26
$N_g = 55$	0.31		0.33
57		0.32	
135	0.31		0.33

pinion

$J_p = 0.32$ $\quad$ for $\phi = 25°$, tip loading, standard addendum $\quad$ Table 12-12 Norton

$B = (12-Q_v)^{2/3} / 4 = 0.6300$ $\quad$ Eq 12.17b Norton

$A = 50 + 56\,(1 - B) = 70.722$ $\quad$ Eq 12.17a Norton

$K_v < 1$

velocity

$$K_v = \left(\frac{A}{A + \sqrt{V_t}}\right)^B = 0.7920 \qquad \text{Eq 12.16us Norton}$$

face application

$K_m = 1.6$ $\quad$ Table 12-16 Norton

$K_a = 1.0$ $\quad$ assume uniform driver, uniform driven $\quad$ Table 12-17 Norton

$K_s = 1.0$ $\quad$ not yet defined by AGMA $\quad$ page 747 Norton

$K_B = 1.0$ $\quad$ solid pinion $\quad$ Eq. 12-20b Norton

$K_I = 1.0$ $\quad$ not an idler $\quad$ page 747 Norton

$$\sigma_{bp} = \frac{W_t p_d}{F\,J_p}\frac{K_a K_m}{K_v} K_s K_B K_I = \frac{(4110 \text{ lbf})(6 \text{ in}^{-1})(1)(1.6)}{(2 \text{ in})(0.32)(0.7920)}(1)(1)(1) = 77.84 \text{ ksi}$$

static no fatigue

choose $\quad$ AISI 4140 nitrided steel $\quad S_{fb}' = 37$ ksi (mean value) $\quad$ Table 12-20 Norton

S_y $\quad$ basic 4140 $\quad N = \frac{S_y}{\sigma_B}$

different J for different ϕ

$$S_{fb} = \frac{K_L}{K_T K_R} S_{fb}' \qquad \text{Eq 12.24 Norton}$$

N = # of revolutions
not # of engagements

$$N = \left(\frac{1000\text{ rev}}{\text{min}}\right)(10\text{ years})\left(\frac{60\text{ min}}{\text{hour}}\right)\left(\frac{24\text{ hour}}{\text{day}}\right)\left(\frac{365\text{ day}}{\text{year}}\right) = 5.256 \times 10^9 \text{ revolutions}$$

$K_L = 1.3558\ N^{-0.0178} = 0.9103$ assume commerical use Figure 12-24 Norton

$K_T = 1.0$ assume $T < 250°$ F

$K_R = 1.0$ assume reliability = 99% Table 12-19 Norton

$$S_{fb} = \frac{K_L}{K_T K_R} S_{fb}' = \frac{0.9103}{(1)(1)}(37\text{ ksi}) = 33.68\text{ ksi}$$

$N_{FS} = S_{fb} / \sigma_{bp} = 0.43$ fatigue factor of safety

change $F = 8$ in

new $K_m = 1.766$ Table 12-16 Norton ← new face

$$\text{new} \quad \sigma_{bp} = \frac{W_t p_d}{F J_P}\frac{K_a K_m}{K_v} K_s K_B K_I = \frac{(4110\text{ lbf})(6\text{ in}^{-1})(1)(1.766)}{(8\text{ in})(0.32)(0.7920)}(1)(1)(1) = 21.48\text{ ksi}$$

new $N_{FS} = 1.57$

change $p_d = 4$ $N_P = 15$ $N_G = 38$ $r_P = 1.875$ in $r_g = 4.750$ in $\rho = 2.533$ $F = 6$ in

$r_P = 3.750$ in $r_g = 9.500$ in $C = 6.625$ in

keep $\phi = 25°$ $Q_V = 8$ AISI 4140 nitrided steel

new $W_t = 4202$ lbf $V_t = 981.7$ fpm

	N_p = 14	15	17
N_g = 35	0.34		0.37
38		0.35	
55	0.34		0.38

$J_p = 0.35$ for $\phi = 25°$, tip loading, standard addendum Table 12-12 Norton

same $B = 0.6300$ $A = 70.722$ Eq 12.17a and 12.17b Norton

new $K_v = 0.7934$ Eq 12.16us Norton

new $K_m = 1.7$ Table 12-16 Norton

new $$\sigma_{bp} = \frac{W_t p_d}{F\,J_P}\frac{K_a K_m}{K_v} K_s K_B K_I = \frac{(4202\text{ lbf})(4\text{ in}^{-1})(1)(1.7)}{(6\text{ in})(0.35)(0.7934)}(1)(1)(1) = 17.15\text{ ksi}$$

new $N_{FS} = 1.96$ OK

++

assume gear load split equally between two ball bearings on each side of pinion

$W_r = W_t \tan\phi = 1959$ lbf

$$W = \sqrt{W_t^2 + W_r^2} = 4636\text{ lbf}$$

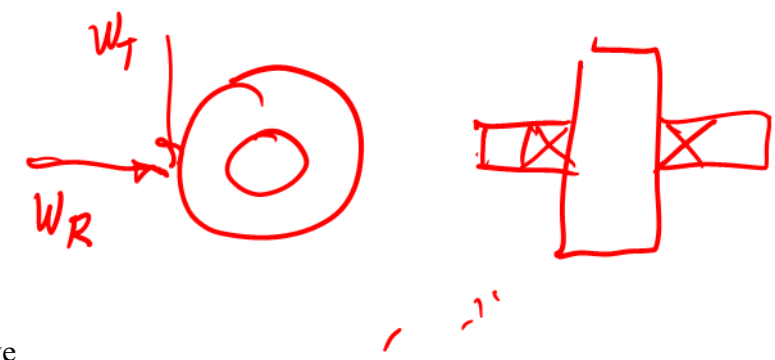

assume no axial load

$P = W / 2 = 2318$ lbf

$N = 5.256 \times 10^9$ revolutions from above

$L_{10} = 5256$ millions of revolutions

$C = P\,(L_{10})^{1/3} = 40{,}302$ lbf

use two 6328 bearings with C = 44,000 lbf

++

surface stress based on design above

<u>use</u> $p_d = 4$ $N_P = 15$ $N_G = 38$ $r_p = 1.875$ in $r_g = 4.750$ in $\rho = 2.533$ $F = 6$ in

<u>use</u> $d_p = 3.750$ in $d_g = 9.500$ in $C = 6.625$ in $W_t = 4202$ lbf $V_t = 981.7$ fpm

<u>use</u> $\phi = 25°$ $Q_V = 8$ AISI 4140 nitrided steel $N = 5.256 \times 10^9$ revolutions

$$\sigma_{cp} = C_P\sqrt{\frac{W_t}{F\,I\,d}\frac{C_a C_m}{C_v} C_s C_f}$$ Eq 12.21 Norton

use upper sign external gearset in Eqs. 12.22a and 12.22b Norton p. 750

use $x_p = 0$ full depth teeth in Eq. 12.22b Norton p. 750

$$\rho_p = \sqrt{\left(r_p + \frac{1+x_p}{p_d}\right)^2 - \left(r_p \cos\phi\right)^2} - \frac{\pi}{p_d}\cos\phi$$

$$= \sqrt{\left(1.875\text{ in} + \frac{\text{in}}{4}\right)^2 - \left(\left(1.875\text{ in}\right)\cos 25°\right)^2} - \frac{\pi\text{ in}}{4}\cos 25° = 0.5641\text{ in}$$ Eq 12.22b Norton

$$\rho_g = C\sin\phi \mp \rho_p = \left(6.625\text{ in}\right)\sin 25° - 0.5641\text{ in} = 2.2357\text{ in}$$ Eq 12.22b Norton

$$I = \frac{\cos\phi}{\left(1/\rho_p \pm 1/\rho_g\right)d_p} = \frac{\cos 25°}{\left(1/(0.5641\text{ in}) + 1/(2.2357\text{ in})\right)(3.750\text{ in})} = 0.1089$$ Eq 12.22a Norton

steel $E_g = E_p = 30\text{x}10^6$ psi $\nu p = \nu g = 0.28$ Table A-1 Norton

$$C_p = \sqrt{\frac{1}{\pi\left[\left(\frac{1-\nu_p^2}{E_p}\right) + \left(\frac{1-\nu_g^2}{E_g}\right)\right]}} = \sqrt{\frac{1}{\pi\left[\left(\frac{1-(0.28)^2}{30\text{x}10^6\text{ psi}}\right) + \left(\frac{1-(0.28)^2}{30\text{x}10^6\text{ psi}}\right)\right]}} = 2276\sqrt{\text{psi}}$$

$C_p = 2300\sqrt{\text{psi}}$ OK Table 12-18 Norton

$C_f = 1$ not yet defined by AGMA page 751 Norton

$C_a = K_a = 1.0$ $C_m = K_m = 1.6$ $C_v = K_v = 0.7934$ $C_S = K_S = 1.0$ page 750 Norton

$$\sigma_{cp} = C_p\sqrt{\frac{W_t}{F\,I\,d}\frac{C_a C_m}{C_v}C_s C_f} = \left(2276\sqrt{\text{psi}}\right)\sqrt{\frac{4202\text{ lbf}}{(6\text{ in})(0.1089)(3.375\text{ in})}\frac{(1)(1.6)}{0.7934}(1)(1)} = 141.1\text{ ksi}$$

$$S_{fc} = \frac{C_L C_H}{C_T C_R}S_{fc}'$$ Eq 12.25 Norton

fatigue strength $S_{fc} \neq S_{fb}$

AISI 4140 nitrided steel S_{fc}' = 167.5 ksi (mean value) Table 12-27 Norton

$C_T = K_T = 1.0$ $C_R = K_R = 1.0$ page 757 Norton

$C_L = 1.4488\text{ N}^{-0.023} = 0.8658$ assume commerical use Figure 12-24 Norton

$C_H = 1.0$ worst case page 758 Norton

$$S_{fc} = \frac{C_L C_H}{C_T C_R} S_{fc}' = \frac{(0.8658)(1)}{(1)(1)}(167.5\text{ ksi}) = 145.0\text{ ksi}$$ Eq 12.25 Norton

$$N_{FS} = \left(\frac{S_{fc}}{\sigma_{cp}}\right)^2 = \left(\frac{145.0\text{ ksi}}{141.1\text{ ksi}}\right)^2 = 1.06$$ page 762 part 14. Norton 5th edition

determine ω_5 for ω_2 = 100 rpm CW and ω_C = 150 rpm CCW when viewed from right side

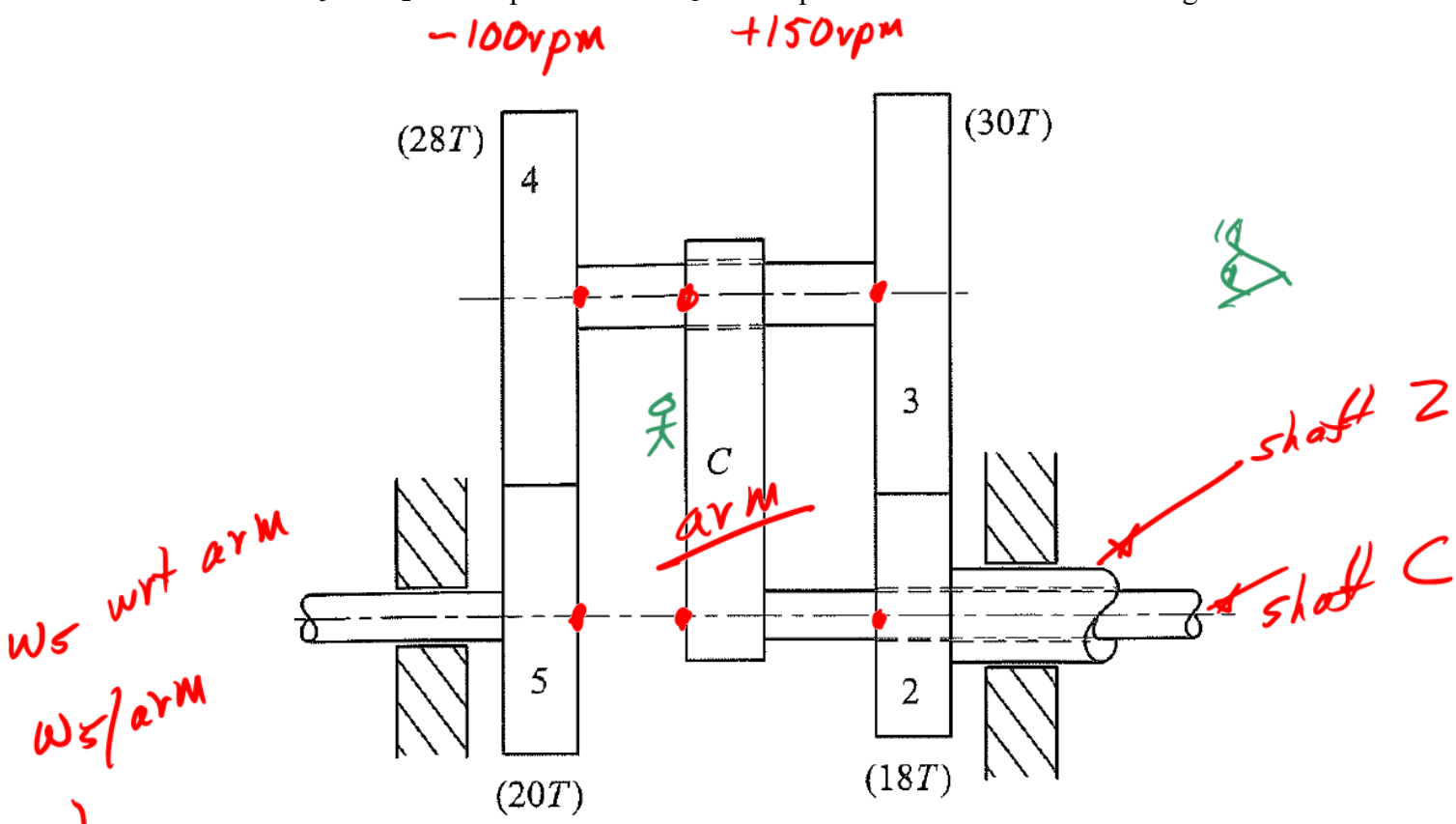

C = carrier = arm use CCW + viewed from right side

$$\frac{\omega_{5/ARM}}{\omega_{2/ARM}} = \left(\frac{\omega_{5/ARM}}{\omega_{4/ARM}}\right)\left(\frac{\omega_{4/ARM}}{\omega_{3/ARM}}\right)\left(\frac{\omega_{3/ARM}}{\omega_{2/ARM}}\right) = \left(-\frac{N_4}{N_5}\right)(1)\left(-\frac{N_2}{N_3}\right) = +\frac{N_2N_4}{N_3N_5} = \frac{(\omega_5-\omega_C)}{(\omega_2-\omega_C)}$$

$$\omega_5 - \omega_C = \frac{N_2N_4}{N_3N_5}\omega_2 - \frac{N_2N_4}{N_3N_5}\omega_C$$

ω2 wrt arm

$$\omega_5 = \frac{N_2N_4}{N_3N_5}\omega_2 + \left(1-\frac{N_2N_4}{N_3N_5}\right)\omega_C$$

$$\omega_5 = \frac{(18)(28)}{(30)(20)}(-100\text{ rpm}) + \left(1-\frac{(18)(28)}{(30)(20)}\right)(+150\text{ rpm}) = +60\text{ rpm}$$