3D Joints

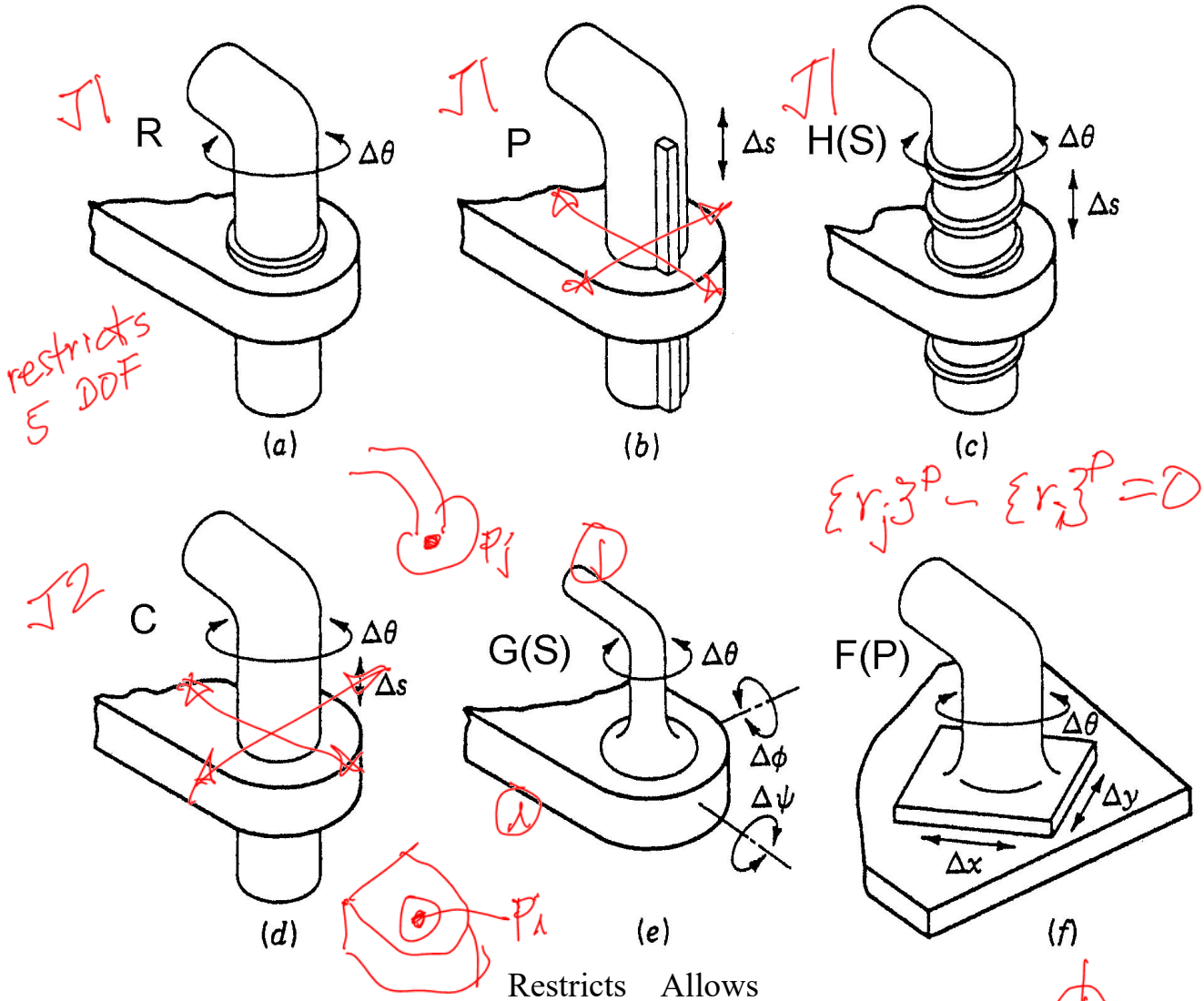

			Restricts	Allows
J1	Revolute	R	5	1
	Prismatic	P	5	1
	Helical (Screw)	H(S)	5	1
J2	Cylindrical	C	4	2
	Universal (Hooke)	U(H)	4	2
	Globe (Spherical)	G(S)	3	3
J3	Flat (Planar)	F(P)	3	3

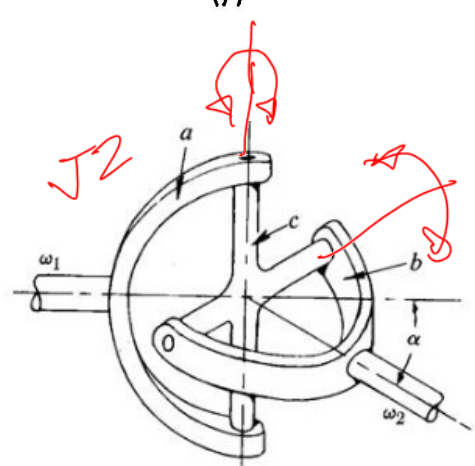

3D mobility

M = 6(nL-1) - 5 nJ1 - 4 nJ2 - 3 nJ3

(nL-1) moving links

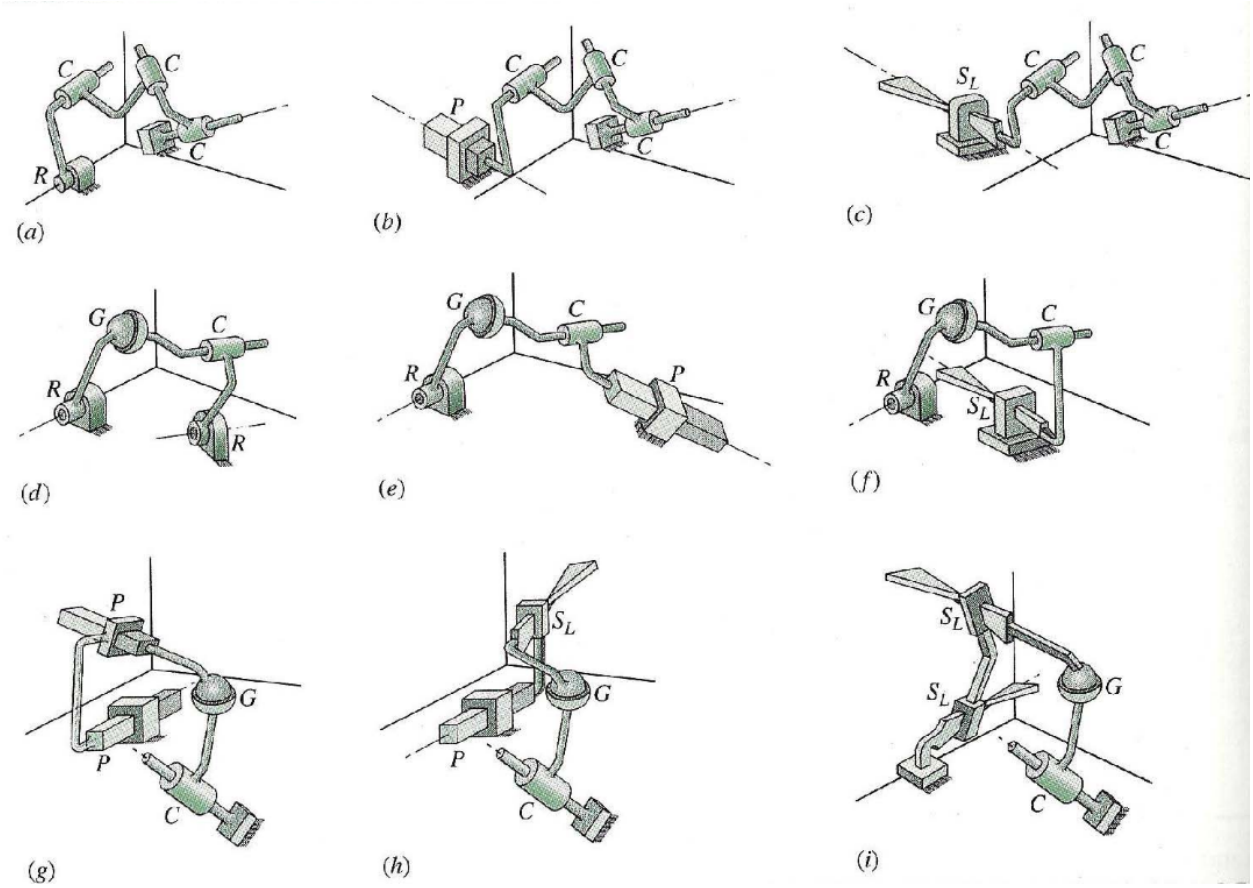
C
C
R
C
(a)
C
C
P
C
(b)
S_L
C
C
C
(c)
G
C
R
R
(d)
G
C
R
P
(e)
G
C
R
S_L
(f)
P
G
P
C
(g)
S_L
G
P
C
(h)
S_L
S_L
G
C
(i)

MacPherson Strut

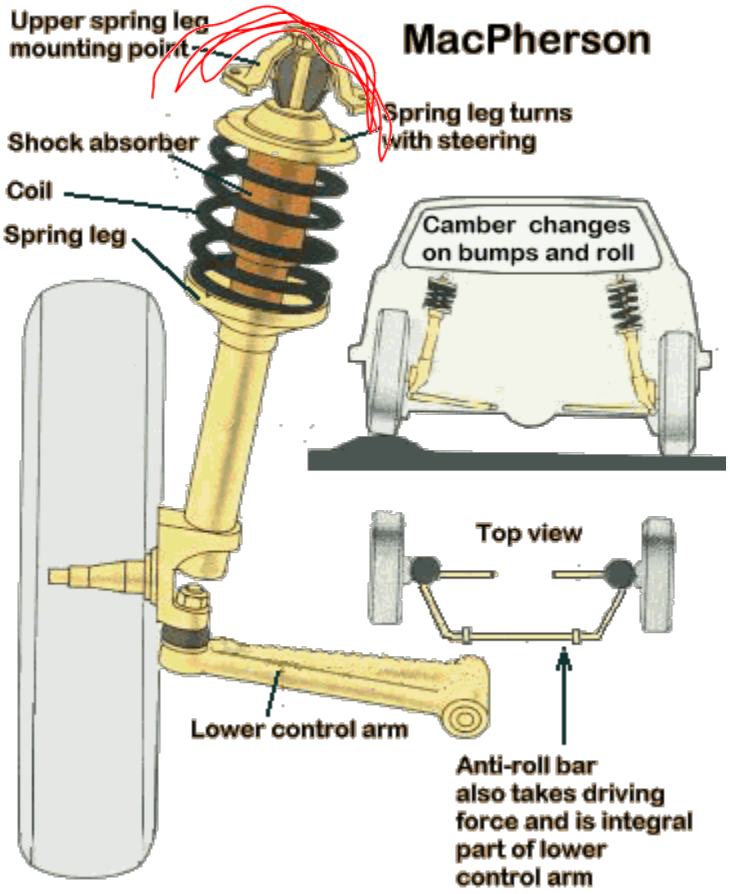

6(6-1)
3D - 5(2) - 4(1) - 3(4)
10 4 12

MacPherson Strut

nL 6 nJ1 2 (R,P) nJ2 1 (C) nJ3 4 (4G) M ~~4~~ 2

2DOF

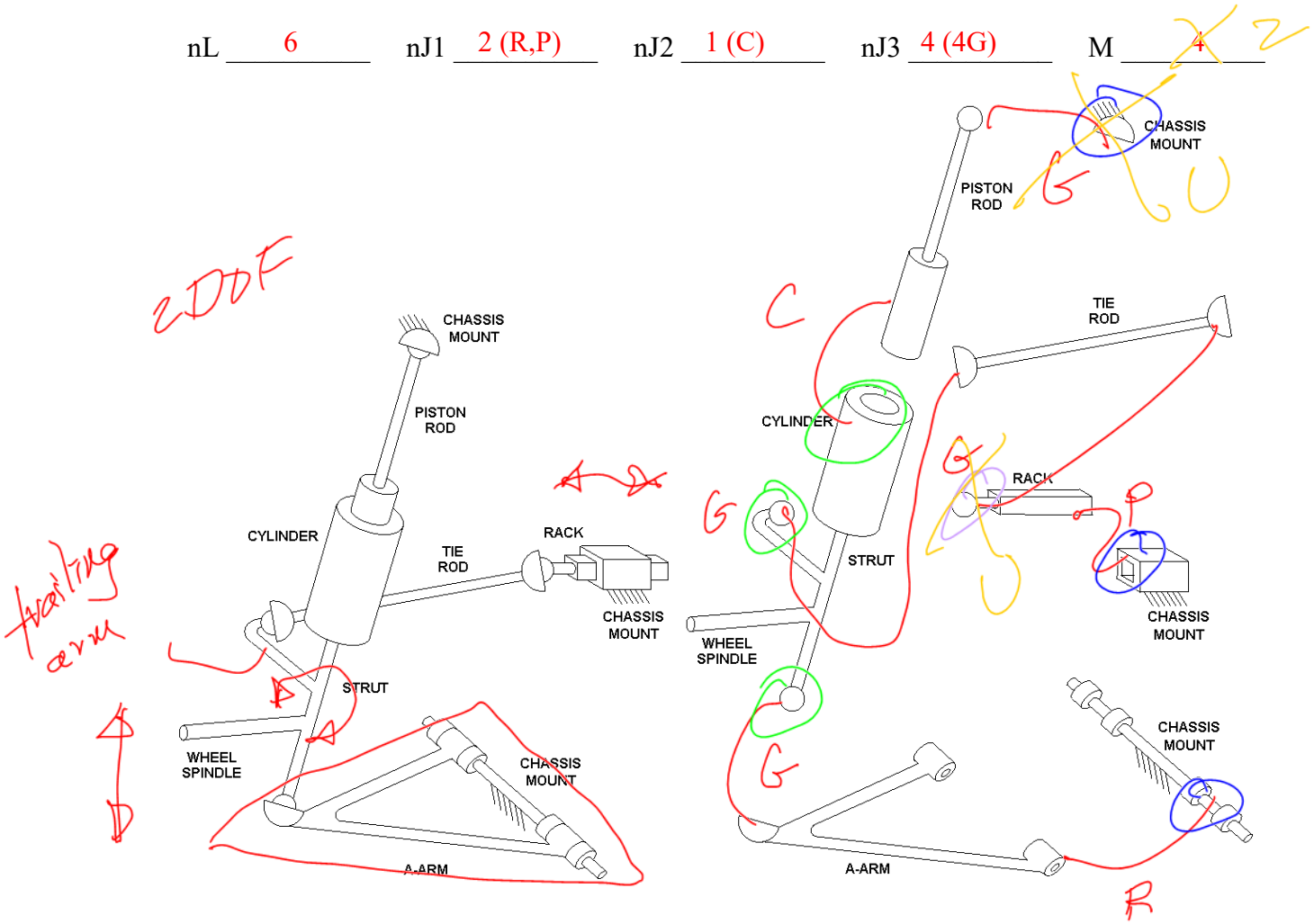

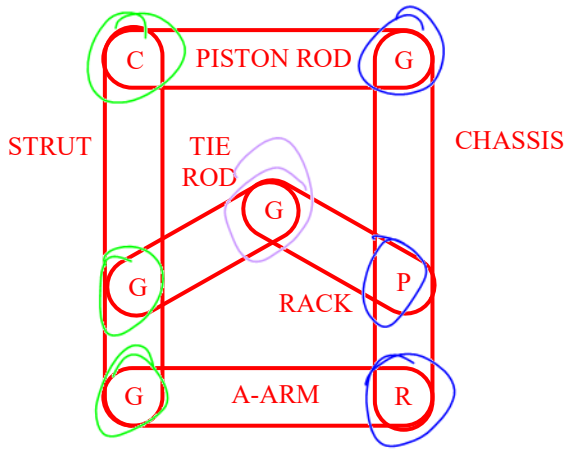

Stewart-Gough Platform (hydraulic)

nL 14 nJ1 0 nJ2 18 (12U, 6C) nJ3 0 M 6

6(14-1)
78 - 4(18)
72

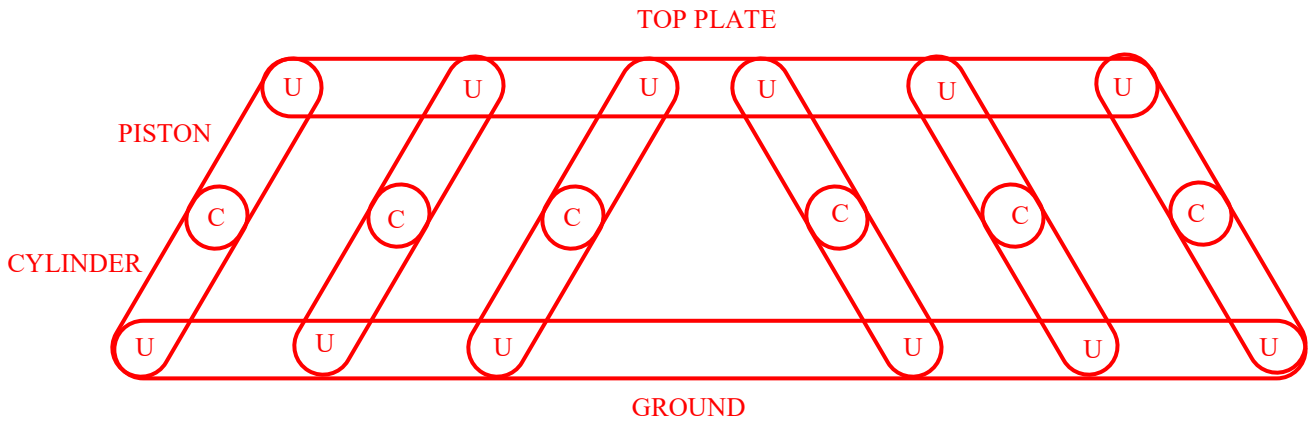

Stewart-Gough Platform (electric)

nL 20 nJ1 12 (6R, 6H) nJ2 12 (U) nJ3 0 M 6

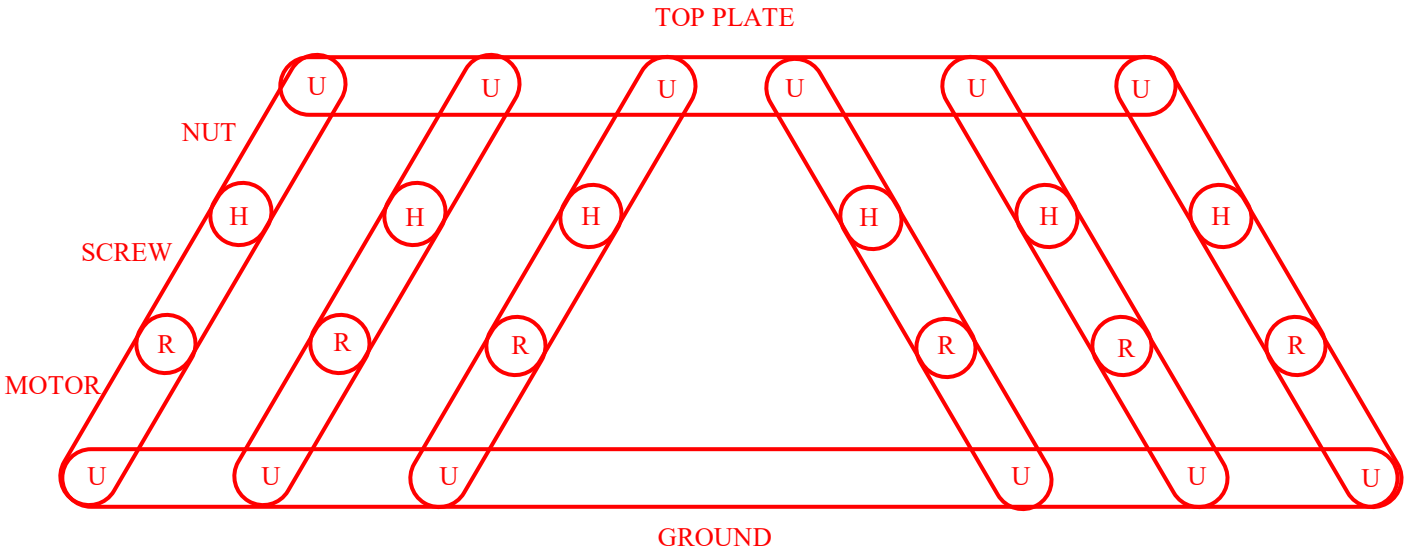

Planar and Spherical Four Bar

nL 4 nJ1 4 nJ2 0 nJ3 0 M -2 ???

6(4-1) -5(4)

18 -20

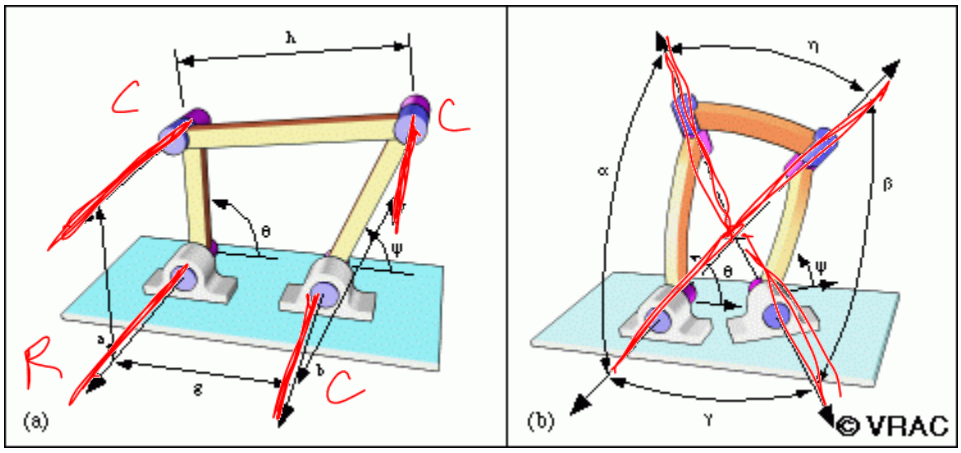

spherical four bar
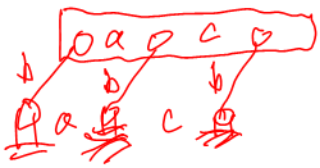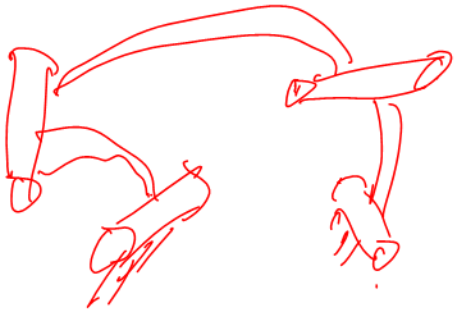
M=1