Three-Dimensional Constraints

General

$$\boxed{\{\Phi\}=\{0\}}$$

$$\{\dot{\Phi}\}=\{0\}$$

$$\{\dot{\Phi}\}=[\Phi_q]\{\dot{q}\}+\{\Phi_t\}=\{0\}$$

$$\boxed{[\Phi_q]\{\dot{q}\}=\{\nu\}} \qquad \boxed{\{\nu\}\equiv-\{\Phi_t\}}$$

$$\{\ddot{\Phi}\}=\{0\}$$

$$\{\ddot{\Phi}\}=[\Phi_q]\{\ddot{q}\}+\left([\Phi_q]\{\dot{q}\}\right)_q\{\dot{q}\}+2[\Phi_{qt}]\{\dot{q}\}+\{\Phi_{tt}\}=\{0\}$$

$$\boxed{[\Phi_q]\{\ddot{q}\}=\{\gamma\}} \qquad \boxed{\{\gamma\}\equiv-\left([\Phi_q]\{\dot{q}\}\right)_q\{\dot{q}\}-2[\Phi_{qt}]\{\dot{q}\}-\{\Phi_{tt}\}}$$

$$\{\dddot{\Phi}\}=\{0\}$$

$$\boxed{[\Phi_q]\{\dddot{q}\}=\{\eta\}}$$

$$\{\eta\}\equiv-3\left([\Phi_q]\{\dot{q}\}\right)_q\{\ddot{q}\}-\left(\left([\Phi_q]\{\dot{q}\}\right)_q\{\dot{q}\}\right)_q\{\dot{q}\}-3[\Phi_{qt}]\{\ddot{q}\}-3\left([\Phi_{qt}]\{\dot{q}\}\right)_q\{\dot{q}\}-3[\Phi_{qtt}]\{\dot{q}\}-\{\Phi_{ttt}\}$$

$$\{\ddddot{\Phi}\}=\{0\}$$

$$\boxed{[\Phi_q]\{\ddddot{q}\}=\{\sigma\}}$$

$$\{\sigma\}\equiv-4\left([\Phi_q]\{\dddot{q}\}\right)_q\{\dot{q}\}-3\left([\Phi_q]\{\ddot{q}\}\right)_q\{\ddot{q}\}-6\left(\left([\Phi_q]\{\dot{q}\}\right)_q\{\dot{q}\}\right)_q\{\ddot{q}\}-\left(\left(\left([\Phi_q]\{\dot{q}\}\right)_q\{\dot{q}\}\right)_q\{\dot{q}\}\right)_q\{\dot{q}\}$$

$$-4[\Phi_{qt}]\{\dddot{q}\}-12\left([\Phi_{qt}]\{\dot{q}\}\right)_q\{\ddot{q}\}-4\left(\left([\Phi_{qt}]\{\dot{q}\}\right)_q\{\dot{q}\}\right)_q\{\dot{q}\}-6[\Phi_{qtt}]\{\ddot{q}\}-6\left([\Phi_{qtt}]\{\dot{q}\}\right)_q\{\dot{q}\}$$

$$-4[\Phi_{qttt}]\{\dot{q}\}-\{\Phi_{tttt}\}$$

Scleronomic constraints

independent of time such as mechanical joints

$\frac{\partial}{\partial t}$ all zero

$$\{\gamma\} \equiv -\left(\left[\Phi_q\right]\{\dot{q}\}\right)_q \{\dot{q}\}$$

$$\{\eta\} \equiv \{\dot{\gamma}\} - \left(\left[\Phi_q\right]\{\ddot{q}\}\right)_q \{\dot{q}\}$$

$$\{\sigma\} \equiv \{\dot{\eta}\} - \left(\left[\Phi_q\right]\{\dddot{q}\}\right)_q \{\dot{q}\}$$

use same $\{\gamma\}$ for both $\{\dot{\omega}'\}$ and $\{\ddot{p}\}$ solutions

must use $\{\eta_{\pi'}\}$ for $\{\ddot{\omega}'\}$ and different $\{\eta_p\}$ for $\{\ddot{p}\}$ solutions

must use $\{\sigma_{\pi'}\}$ for $\{\dddot{\omega}'\}$ and different $\{\sigma_p\}$ for $\{\dddot{p}\}$ solutions

J3 **Spherical**

restrict 3 translations

allow 3 rotations

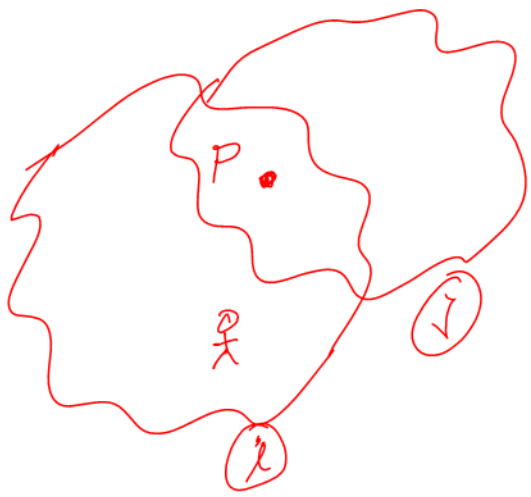

3x1 $$\{\Phi\}_{SPH} = \{r_j\}^P - \{r_i\}^P = \{0_{3x1}\}$$

3x3 $$\left[\Phi_{ri}\right]_{SPH} = -\left[I_3\right]$$

3x3 $$\left[\Phi_{\pi' i}\right]_{SPH} = \left[A_i\right]\left[\tilde{s}_i\right]'^P$$

3x4 $$\left[\Phi_{pi}\right]_{SPH} = 2\left[A_i\right]\left[\tilde{s}_i\right]'^P\left[G_i\right]$$

$$\left[\Phi_{rj}\right]_{SPH} = \left[I_3\right]$$

$$\left[\Phi_{\pi' j}\right]_{SPH} = -\left[A_j\right]\left[\tilde{s}_j\right]'^P$$

$$\left[\Phi_{pj}\right]_{SPH} = -2\left[A_j\right]\left[\tilde{s}_j\right]'^P\left[G_j\right]$$

$\{\nu\} = -\{\Phi_t\}$

3x1 $$\{\nu\}_{SPH} = \{0_{3x1}\}$$

3x1 $$\{\gamma\}_{SPH} = \left[A_i\right]\left[\tilde{\omega}_i\right]'\left[\tilde{\omega}_i\right]'\{s_i\}'^P - \left[A_j\right]\left[\tilde{\omega}_j\right]'\left[\tilde{\omega}_j\right]'\{s_j\}'^P$$

$\omega \times \omega \times r$

$$\left[H_i\right]' = 2\left[\tilde{\omega}_i\right]'\left[\dot{\tilde{\omega}}_i\right]' + \left[\dot{\tilde{\omega}}_i\right]'\left[\tilde{\omega}_i\right]' + \left[\tilde{\omega}_i\right]'\left[\tilde{\omega}_i\right]'\left[\tilde{\omega}_i\right]'$$

not angular momentum

$$\{\eta\}_{SPH}=[A_i][H_i]'\{s_i\}'^P-[A_j][H_j]'\{s_j\}'^P \qquad \{\ddot{\omega}\}' \text{ version}$$

$$\{\eta\}_{SPH_p}=\{\eta\}_{SPH}-\tfrac{1}{4}[A_i]\left([H_i]'-3\left[\dot{\tilde{\omega}}_i\right]'\left[\tilde{\omega}_i\right]'\right)\{s_i\}'^P+\tfrac{1}{4}[A_j]\left([H_j]'-3\left[\dot{\tilde{\omega}}_j\right]'\left[\tilde{\omega}_j\right]'\right)\{s_j\}'^P \qquad \{\ddot{p}\} \text{ version}$$

$$[W_i]'=\left[\ddot{\tilde{\omega}}_i\right]'\left[\tilde{\omega}_i\right]'+3\left[\dot{\tilde{\omega}}_i\right]'\left[\dot{\tilde{\omega}}_i\right]'+3\left[\tilde{\omega}_i\right]'\left[\ddot{\tilde{\omega}}_i\right]'+\left[\dot{\tilde{\omega}}_i\right]'\left[\tilde{\omega}_i\right]'\left[\tilde{\omega}_i\right]'+2\left[\tilde{\omega}_i\right]'\left[\dot{\tilde{\omega}}_i\right]'\left[\tilde{\omega}_i\right]'+3\left[\tilde{\omega}_i\right]'\left[\tilde{\omega}_i\right]'\left[\dot{\tilde{\omega}}_i\right]'$$
$$+\left[\tilde{\omega}_i\right]'\left[\tilde{\omega}_i\right]'\left[\tilde{\omega}_i\right]'\left[\tilde{\omega}_i\right]'$$

$$\{\sigma\}_{SPH}=[A_i][W_i]'\{s_i\}'^P-[A_j][W_j]'\{s_j\}'^P \qquad \{\ddot{\omega}\}' \text{ version}$$

$$\left.\begin{aligned}
\{\kappa F_i\}_{SPH} &= \{0_{3x1}\}\\
\{\kappa T_i\}_{SPH} &= \left[\tilde{s}_i\right]'^P\left[\tilde{\omega}_i\right]'\left[A_i\right]^T\{\lambda\}_{SPH}\\
\{\kappa F_j\}_{SPH} &= \{0_{3x1}\}\\
\{\kappa T_j\}_{SPH} &= -\left[\tilde{s}_j\right]'^P\left[\tilde{\omega}_j\right]'\left[A_j\right]^T\{\lambda\}_{SPH}
\end{aligned}\right\}$$

3rd order DAE

allows 5 restricts

J5 **Double spherical**

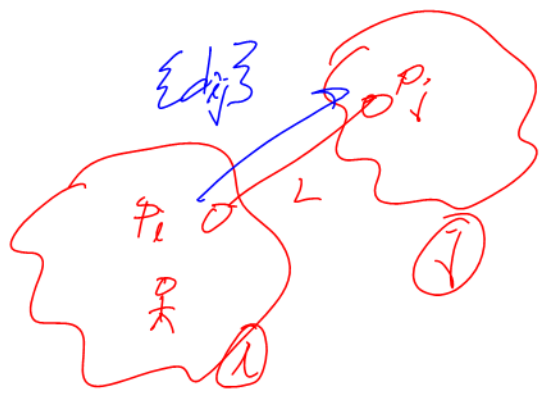

1H $\Phi_{SPH_SPH}=\{d_{ij}\}^T\{d_{ij}\}-L^2=0$ L=constant length

for $\{d_{ij}\}=\{r_j\}^P-\{r_i\}^P$ and $\{\dot{d}_{ij}\}=\{\dot{r}_j\}^P-\{\dot{r}_i\}^P$

zero parallel to {dij}

1x3 $[\Phi_{ri}]_{SPH_SPH}=-2\{d_{ij}\}^T$

1x3 $[\Phi_{\pi'i}]_{SPH_SPH}=2\{d_{ij}\}^T[A_i][\tilde{s}_i]'^P$

1x4 $[\Phi_{pi}]_{SPH_SPH}=4\{d_{ij}\}^T[A_i][\tilde{s}_i]'^P[G_i]$

$[\Phi_{rj}]_{SPH_SPH}=2\{d_{ij}\}^T$

$[\Phi_{\pi'j}]_{SPH_SPH}=-2\{d_{ij}\}^T[A_j][\tilde{s}_j]'^P$

$[\Phi_{pj}]_{SPH_SPH}=-4\{d_{ij}\}^T[A_j][\tilde{s}_j]'^P[G_j]$

$$\boxed{\nu_{SPH_SPH}=0}$$

$$\boxed{\gamma_{SPH_SPH} = -2\left\{\dot{d}_{ij}\right\}^T\left\{\dot{d}_{ij}\right\} + 2\left\{d_{ij}\right\}^T\{\gamma\}_{SPH}}$$

$$\eta_{SPH_SPH} = -6\left\{\dot{d}_{ij}\right\}^T\left\{\ddot{d}_{ij}\right\} + 2\left\{d_{ij}\right\}^T\{\eta\}_{SPH} \qquad \{\ddot{\omega}\}' \text{ version}$$

$$\eta_{SPH_SPH_P} = \eta_{SPH_SPH} - \tfrac{1}{2}\left\{d_{ij}\right\}^T[A_i]\left([H_i]' - 3\left[\dot{\tilde{\omega}}_i\right]'\left[\tilde{\omega}_i\right]'\right)\{s_i\}'^P + \tfrac{1}{2}\left\{d_{ij}\right\}^T[A_j]\left([H_j]' - 3\left[\dot{\tilde{\omega}}_j\right]'\left[\tilde{\omega}_j\right]'\right)\{s_j\}'^P \qquad \{\dddot{p}\} \text{ version}$$

$$\sigma_{SPH_SPH} = -6\left\{\ddot{d}_{ij}\right\}^T\left\{\ddot{d}_{ij}\right\} - 8\left\{\dot{d}_{ij}\right\}^T\left\{\dddot{d}_{ij}\right\} + 2\left\{d_{ij}\right\}^T\{\sigma\}_{SPH} \qquad \{\dddot{\omega}\}' \text{ version}$$

$$\{\boldsymbol{\kappa}F_i\}_{SPH_SPH} = -2\boldsymbol{\lambda}_{SPH_SPH}\left\{\dot{d}_{ij}\right\}$$

$$\{\kappa T_i\}_{SPH_SPH} = +2\lambda_{SPH_SPH}\begin{pmatrix}\left(\left([A_i]\left[\tilde{s}_i\right]'^P\right)^T\left\{\dot{d}_{ij}\right\} + \left([A_i]\left[\tilde{\omega}_i\right]'\left[\tilde{s}_i\right]'^P\right)^T\left\{d_{ij}\right\} \\ + \left[\tilde{s}_i\right]'^P\left[\tilde{\omega}_i\right]'\{s_i\}'^P + \left([A_i]\left[\tilde{s}_i\right]'^P\right)^T[A_j]\left[\tilde{\omega}_j\right]'\{s_j\}'^P\end{pmatrix}$$

$$\{\boldsymbol{\kappa}F_j\}_{SPH_SPH} = 2\boldsymbol{\lambda}_{SPH_SPH}\left\{\dot{d}_{ij}\right\}$$

$$\{\kappa T_j\}_{SPH_SPH} = -2\lambda_{SPH_SPH}\begin{pmatrix}\left(\left([A_j]\left[\tilde{s}_j\right]'^P\right)^T\left\{\dot{d}_{ij}\right\} + \left([A_j]\left[\tilde{\omega}_j\right]'\left[\tilde{s}_j\right]'^P\right)^T\left\{d_{ij}\right\} \\ - \left[\tilde{s}_j\right]'^P\left[\tilde{\omega}_j\right]'\{s_j\}'^P - \left([A_j]\left[\tilde{s}_j\right]'^P\right)^T[A_i]\left[\tilde{\omega}_i\right]'\{s_i\}'^P\end{pmatrix}$$

5 **Dot-1** $\{a_i\}^T\{a_j\} = 0$ $\qquad \{a_i\} \perp \{a_j\}$

1x1 $\Phi_{DOT_1} = \{a_i\}^T\{a_j\} = 0$

for $\{a_i\} = \{r_i\}^Q - \{r_i\}^P$ and $\{a_j\} = \{r_j\}^Q - \{r_j\}^P$

1x3 $\left[\Phi_{ri}\right]_{DOT_1} = \left[0_{1x3}\right]$

1x3 $\left[\Phi_{\pi'i}\right]_{DOT_1} = -\{a_j\}'^T[A_j]^T[A_i]\left[\tilde{a}_i\right]' = -\{a_j\}^T[A_i]\left[\tilde{a}_i\right]'$

1x4 $\left[\Phi_{pi}\right]_{DOT_1} = -2\{a_j\}'^T[A_j]^T[A_i]\left[\tilde{a}_i\right]'[G_i] = -2\{a_j\}^T[A_i]\left[\tilde{a}_i\right]'[G_i]$

p_i $\qquad$ G_i

$$\left[\Phi_{rj}\right]_{DOT_1}=\left[0_{1x3}\right]$$

$$\left[\Phi_{\pi'j}\right]_{DOT_1}=-\{a_i\}'^T\left[A_i\right]^T\left[A_j\right]\left[\tilde{a}_j\right]'=-\{a_i\}^T\left[A_j\right]\left[\tilde{a}_j\right]'$$

$$\left[\Phi_{pj}\right]_{DOT_1}=-2\{a_i\}'^T\left[A_i\right]^T\left[A_j\right]\left[\tilde{a}_j\right]'\left[G_j\right]=-2\{a_i\}^T\left[A_j\right]\left[\tilde{a}_j\right]'\left[G_j\right]$$

$$\boxed{\nu_{DOT_1}=0}$$

$$\gamma_{DOT_1}=-\{a_j\}'^T\left(\left[A_j\right]^T\left[A_i\right]\left[\tilde{\omega}_i\right]'\left[\tilde{\omega}_i\right]'+2\left[\tilde{\omega}_j\right]'^T\left[A_j\right]^T\left[A_i\right]\left[\tilde{\omega}_i\right]'+\left[\tilde{\omega}_j\right]'\left[\tilde{\omega}_j\right]'\left[A_j\right]^T\left[A_i\right]\right)\{a_i\}'$$

$$\begin{aligned}\eta_{DOT_1}=&-\{a_j\}'^T[A_j]^T[A_i][H_i]'\{a_i\}'-\{a_i\}'^T[A_i]^T[A_j][H_j]'\{a_j\}'\\&-3\{a_j\}'^T([\tilde{\omega}_j]'[\tilde{\omega}_j]'-[\dot{\tilde{\omega}}_j]')[A_j]^T[A_i][\tilde{\omega}_i]'\{a_i\}'\\&-3\{a_i\}'^T([\tilde{\omega}_i]'[\tilde{\omega}_i]'-[\dot{\tilde{\omega}}_i]')[A_i]^T[A_j][\tilde{\omega}_j]'\{a_j\}'\end{aligned}$$

$\{\ddot{\omega}\}'$ version

$$\begin{aligned}\eta_{DOT_1_p}=&\eta_{DOT_1}+\tfrac{1}{4}\{a_j\}'^T[A_j]^T[A_i]\left([H_i]'-3\left[\dot{\tilde{\omega}}_i\right]'\left[\tilde{\omega}_i\right]'\right)\{a_i\}'\\&+\tfrac{1}{4}\{a_i\}'^T[A_i]^T[A_j]\left([H_j]'-3\left[\dot{\tilde{\omega}}_j\right]'\left[\tilde{\omega}_j\right]'\right)\{a_j\}'\end{aligned}$$

$\{\ddot{p}\}$ version

$$\begin{aligned}\sigma_{DOT_1}=&-\{a_j\}'^T[A_j]^T[A_i][W_i]'\{a_i\}'-\{a_i\}'^T[A_i]^T[A_j][W_j]'\{a_j\}'\\&+4\{a_j\}'^T[\tilde{\omega}_j]'[A_j]^T[A_i]\left([H_i]'+[\ddot{\tilde{\omega}}_i]'\right)\{a_i\}'\\&+4\{a_i\}'^T[\tilde{\omega}_i]'[A_i]^T[A_j]\left([H_j]'+[\ddot{\tilde{\omega}}_j]'\right)\{a_j\}'\\&-6\{a_j\}'^T([\tilde{\omega}_j]'[\tilde{\omega}_j]'-[\dot{\tilde{\omega}}_j]')[A_j]^T[A_i]([\tilde{\omega}_i]'[\tilde{\omega}_i]'+[\dot{\tilde{\omega}}_i]')\{a_i\}'\end{aligned}$$

$\{\dddot{\omega}\}'$ version

$$\left\{\boldsymbol{\kappa}F_i\right\}_{DOT_1}=\left\{0_{3x1}\right\}$$

$$\left\{\kappa T_i\right\}_{DOT_1}=-\lambda_{DOT_1}\left(\left(\left[A_i\right]\left[\tilde{a}_i\right]'\right)^T\left[A_j\right]\left[\tilde{\omega}_j\right]'\left\{a_j\right\}'+\left(\left[A_i\right]\left[\tilde{\omega}_i\right]'\left[\tilde{a}_i\right]'\right)^T\left[A_j\right]\left\{a_j\right\}'\right)$$

$$\left\{\boldsymbol{\kappa}F_j\right\}_{DOT_1}=\left\{0_{3x1}\right\}$$

$$\left\{\kappa T_j\right\}_{DOT_1}=-\lambda_{DOT_1}\left(\left(\left[A_j\right]\left[\tilde{a}_j\right]'\right)^T\left[A_i\right]\left[\tilde{\omega}_i\right]'\left\{a_i\right\}'+\left(\left[A_j\right]\left[\tilde{\omega}_j\right]'\left[\tilde{a}_j\right]'\right)^T\left[A_i\right]\left\{a_i\right\}'\right)$$

<u>Dot-2</u>

$\Phi_{DOT_2}=\{a_i\}^T\{d_{ij}\}=0$ $\{a_i\}\perp\{d_{ij}\}$

for $\{d_{ij}\}=\{r_j\}^P-\{r_i\}^P$ and $\{\dot{d}_{ij}\}=\{\dot{r}_j\}^P-\{\dot{r}_i\}^P$ and $\{a_i\}=\{r_i\}^Q-\{r_i\}^P$

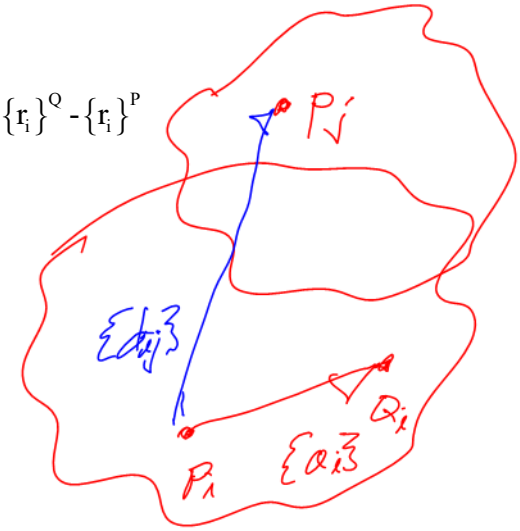

$$[\Phi_{ri}]_{DOT_2}=-\{a_i\}'^T[A_i]^T=-\{a_i\}^T$$

$$[\Phi_{\pi'i}]_{DOT_2}=\{a_i\}'^T[\tilde{s}_i]'^P-\{d_{ij}\}^T[A_i][\tilde{a}_i]'$$

$$[\Phi_{pi}]_{DOT_2}=2\left(\{a_i\}'^T[\tilde{s}_i]'^P-\{d_{ij}\}^T[A_i][\tilde{a}_i]'\right)[G_i]$$

$$[\Phi_{rj}]_{DOT_2}=\{a_i\}'^T[A_i]^T=\{a_i\}^T$$

$$[\Phi_{\pi'j}]_{DOT_2}=-\{a_i\}'^T[A_i]^T[A_j][\tilde{s}_j]'^P=-\{a_i\}^T[A_j][\tilde{s}_j]'^P$$

$$[\Phi_{pj}]_{DOT_2}=-2\{a_i\}'^T[A_i]^T[A_j][\tilde{s}_j]'^P[G_j]=-2\{a_i\}^T[A_j][\tilde{s}_j]'^P[G_j]$$

$$\nu_{DOT_2}=0$$

$$\gamma_{DOT_2}=-2\{\dot{d}_{ij}\}^T[A_i][\tilde{\omega}_i]'\{a_i\}'-\{d_{ij}\}^T[A_i][\tilde{\omega}_i]'[\tilde{\omega}_i]'\{a_i\}'+\{a_i\}'^T[A_i]^T\{\gamma\}_{SPH}$$

$$\eta_{DOT_2}=-3\{\ddot{d}_{ij}\}^T[A_i][\tilde{\omega}_i]'\{a_i\}'-3\{\dot{d}_{ij}\}^T[A_i]\left([\tilde{\omega}_i]'[\tilde{\omega}_i]'+[\dot{\tilde{\omega}}_i]'\right)\{a_i\}'$$
$$-\{d_{ij}\}^T[A_i][H_i]'\{a_i\}'+\{a_i\}'^T[A_i]^T\{\eta\}_{SPH}$$

$\{\ddot{\omega}\}'$ version

$$\eta_{DOT_2_p}=\eta_{DOT_2}-\tfrac{1}{4}\{a_i\}'^T\left([H_i]'-3[\dot{\tilde{\omega}}_i]'[\tilde{\omega}_i]'\right)\{s_i\}'^P$$
$$+\tfrac{1}{4}\{d_{ij}\}^T[A_i]\left([H_i]'-3[\dot{\tilde{\omega}}_i]'[\tilde{\omega}_i]'\right)\{a_i\}'$$
$$+\tfrac{1}{4}\{a_i\}'^T[A_i]^T[A_j]\left([H_j]'-3[\dot{\tilde{\omega}}_j]'[\tilde{\omega}_j]'\right)\{s_j\}'^P$$

$\{\ddot{p}\}$ version

$$\sigma_{DOT_2}=-4\{\dddot{d}_{ij}\}^T[A_i][\tilde{\omega}_i]'\{a_i\}'-6\{\ddot{d}_{ij}\}^T[A_i]\left([\tilde{\omega}_i]'[\tilde{\omega}_i]'+[\dot{\tilde{\omega}}_i]'\right)\{a_i\}'$$
$$-4\{\dot{d}_{ij}\}^T[A_i]\left([H_i]'+[\ddot{\tilde{\omega}}_i]'\right)\{a_i\}'-\{d_{ij}\}'^T[A_i][W_i]'\{a_i\}'$$
$$+\{a_i\}'^T[A_i]^T\{\sigma\}_{SPH}$$

$\{\dddot{\omega}\}'$ version

$$\{\kappa F_i\}_{DOT_2}=-\lambda_{DOT_2}[A_i][\tilde{\omega}_i]'\{a_i\}'$$

$$\{\kappa T_i\}_{DOT_2}=-\lambda_{DOT_2}\begin{pmatrix}([A_i][\tilde{a}_i]')^T\{\dot{d}_{ij}\}+([A_i][\tilde{\omega}_i]'[\tilde{a}_i]')^T\{d_{ij}\}\\+[\tilde{a}_i]'[\tilde{\omega}_i]'\{s_i\}'^P+([A_i][\tilde{a}_i]')^T[A_j][\tilde{\omega}_j]'\{s_j\}'^P\end{pmatrix}$$

$$\{\kappa F_j\}_{DOT_2} = \lambda_{DOT_2}[A_i][\tilde{\omega}_i]'\{a_i\}'$$

$$\{\kappa T_j\}_{DOT_2} = -\lambda_{DOT_2}\left(\left([A_j][\tilde{s}_j]'^P\right)^T[A_i][\tilde{\omega}_i]'\{a_i\}' + \left([A_j][\tilde{\omega}_j]'[\tilde{s}_j]'^P\right)^T[A_i]\{a_i\}'\right)$$

Euler parameters

$\cancel{\{p_i\}^T\{p_i\} = 0}$

1x1 $\Phi_{EUL} = \{p_i\}^T\{p_i\} - 1 = 0$

1x3 $[\Phi_{ri}]_{EUL} = [0_{1x3}]$

1x4 $[\Phi_{pi}]_{EUL} = 2\{p_i\}^T$

$\nu_{EUL} = 0$

$\gamma_{EUL} = -2\{\dot{p}_i\}^T\{\dot{p}_i\}$

$\eta_{EUL} = -6\{\ddot{p}_i\}^T\{\dot{p}_i\}$ $\{\ddot{p}\}$ version

Fixed revolute rotation driver (angle θ about fixed axis [u v w]^T)

angle θ about fixed axis $\{\hat{u}\} = \begin{Bmatrix} u \\ v \\ w \end{Bmatrix}$ $\{p\} = \begin{Bmatrix} e_0 \\ e_1 \\ e_2 \\ e_3 \end{Bmatrix} = \begin{Bmatrix} C\frac{\theta}{2} \\ uS\frac{\theta}{2} \\ vS\frac{\theta}{2} \\ wS\frac{\theta}{2} \end{Bmatrix}$

$\Phi_{FRRD} = \theta - f(t) = 0$

recommend dot products to get θ four-quadrant

or $\theta = 2\cos^{-1}e_0$ or $\theta = 2\sin^{-1}\left(\sqrt{e_1^2+e_2^2+e_3^2}\right)$ or $\theta = 2\tan^{-1}\left(\frac{\sqrt{e_1^2+e_2^2+e_3^2}}{e_0}\right)$

$[\Phi_{ri}]_{FRRD} = [0_{1x3}]$

$[\Phi_{\pi'i}]_{FRRD} = \{\hat{u}\}^T$

$[\Phi_{pi}]_{FRRD} = 2\{\hat{u}\}^T[G_i]$

$\nu_{FRRD} = f_t$

$\gamma_{FRRD} = f_{tt}$

$\eta_{FRRD} = f_{ttt}$ $\{\ddot{\omega}\}'$ version

$\eta_{FRRD} = -\frac{\dot{\theta}^3}{4} + f_{ttt}$ $\{\ddot{p}\}$ version

$\{\kappa F_i\}_{FRRD} = \{0_{3x1}\}$

$\{\kappa T_i\}_{FRRD} = \{0_{3x1}\}$

<u>3D relative distance driver (see double spherical)</u>

$\Phi_{3DRDD} = \{d_{ij}\}^T \{d_{ij}\} - (f(t))^2 = 0$ f(t)>0

for $\{d_{ij}\} = \{r_j\}^P - \{r_i\}^P$ and $\{\dot{d}_{ij}\} = \{\dot{r}_j\}^P - \{\dot{r}_i\}^P$

$[\Phi_{qi}]_{3DRDD} = [\Phi_{qi}]_{SPH_SPH}$

$[\Phi_{qj}]_{3DRDD} = [\Phi_{qj}]_{SPH_SPH}$

$\nu_{3DRDD} = 2\, f\, f_t$

$\gamma_{3DRDD} = \gamma_{SPH_SPH} + 2\, f_t^2 + 2\, f\, f_{tt}$

$\eta_{3DRDD} = \eta_{SPH_SPH} + 6\, f_t\, f_{tt} + 2\, f\, f_{ttt}$ $\{\ddot{\omega}\}'$ version

<u>Dot-2 distance driver (see dot-2)</u>

$\Phi_{D2DD} = \{a_i\}^T \{d_{ij}\}/L - f(t) = 0$ $L = |a_i|$ = constant length

for $\{d_{ij}\} = \{r_j\}^P - \{r_i\}^P$ and $\{\dot{d}_{ij}\} = \{\dot{r}_j\}^P - \{\dot{r}_i\}^P$ and $\{a_i\} = \{r_i\}^Q - \{r_i\}^P$

$$\left[\Phi_{qi}\right]_{D2DD} = \frac{\left[\Phi_{qi}\right]_{DOT_2}}{L}$$

$$\left[\Phi_{qj}\right]_{D2DD} = \frac{\left[\Phi_{qj}\right]_{DOT_2}}{L}$$

$$\nu_{D2DD} = f_t$$

$$\gamma_{D2DD} = \frac{\gamma_{DOT_2}}{L} + f_{tt}$$

$$\eta_{D2DD} = \frac{\eta_{DOT_2}}{L} + f_{ttt}$$ $\{\ddot{\omega}\}'$ version

<u>General revolute rotation driver</u>

$$\Phi_{GRRD} = \theta - f(t) = 0$$ $\{\ddot{\omega}\}'$ version

<u>Screw distance-angle (see dot-2 and revolute rotation driver)</u>

$\Phi_{SDA} = \{a_i\}^T \{d_{ij}\}/L - \lambda\,\theta = 0$ $L = |a_i|$=constant length, λ=screw pitch, θ=screw angle

for $\{d_{ij}\} = \{r_j\}^P - \{r_i\}^P$ and $\{\dot{d}_{ij}\} = \{\dot{r}_j\}^P - \{\dot{r}_i\}^P$ and $\{a_i\} = \{r_i\}^Q - \{r_i\}^P$

$$\left[\Phi_{ri}\right]_{SDA} = \frac{\left[\Phi_{ri}\right]_{DOT_2}}{L}$$

$$\left[\Phi_{\pi' i}\right]_{SDA} = \frac{\left[\Phi_{\pi' i}\right]_{DOT_2}}{L} - \lambda\begin{bmatrix} u & v & w \end{bmatrix}$$

$$\left[\Phi_{pi}\right]_{SDA} = \frac{\left[\Phi_{pi}\right]_{DOT_2}}{L} - \lambda\begin{bmatrix} -2\sqrt{1-e_0^2} & 2e_0u & 2e_0v & 2e_0w \end{bmatrix}$$

Local Joint Definition Frames

do not need secondary joint frames for spherical (S) and double spherical (S-S)

<u>need secondary joint frames</u> if axes of constraints for universal U, revolute R, cylindrical C, prismatic P, or helical (screw) H **<u>are not parallel</u>** to local body-fixed direction

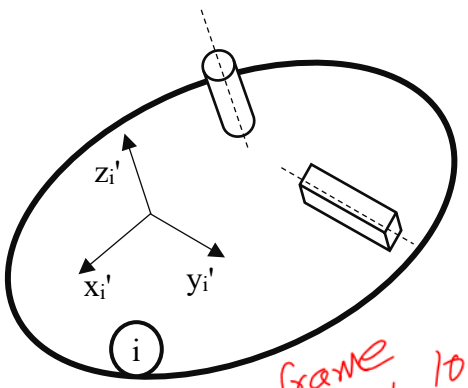

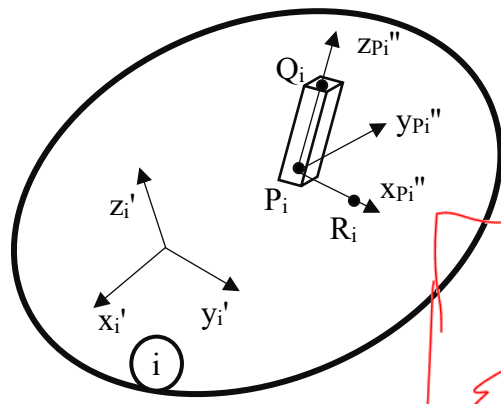

define
$\{s_i\}^{'P}$
$\{s_i\}^{'Q}$
$\{s_i\}^{'R}$

attitude of secondary frame in primary local frame

$$[C_i]^{'P} = \left[\{\hat{f}_i\}^{'P} \quad \{\hat{g}_i\}^{'P} \quad \{\hat{h}_i\}^{'P}\right]$$

$$[C_i]^{'P} = \left[\mathrm{unit}\left(\{s_i\}^{'R} - \{s_i\}^{'P}\right) \quad \{\hat{h}_i\}^{'P} \times \{\hat{f}_i\}^{'P} \quad \mathrm{unit}\left(\{s_i\}^{'Q} - \{s_i\}^{'P}\right)\right]$$

$$[C_i]^{P} = \left[\{\hat{f}_i\}^{P} \quad \{\hat{g}_i\}^{P} \quad \{\hat{h}_i\}^{P}\right] = [A_i][C_i]^{'P}$$

global attitude of secondary frame

$$\{F_{on\,i}\}^{P}{}'' = \left([C_i]^{'P}\right)^T [A_i]^T \{F_{on\,i}\}^{P}$$

$$\{T_{on\,i}\}'' = \left([C_i]^{'P}\right)^T \{T_{on\,i}\}' \qquad \{T_{on\,i}\} = [A_i]\{T_{on\,i}\}'$$

Three-Dimensional Joint Constraints

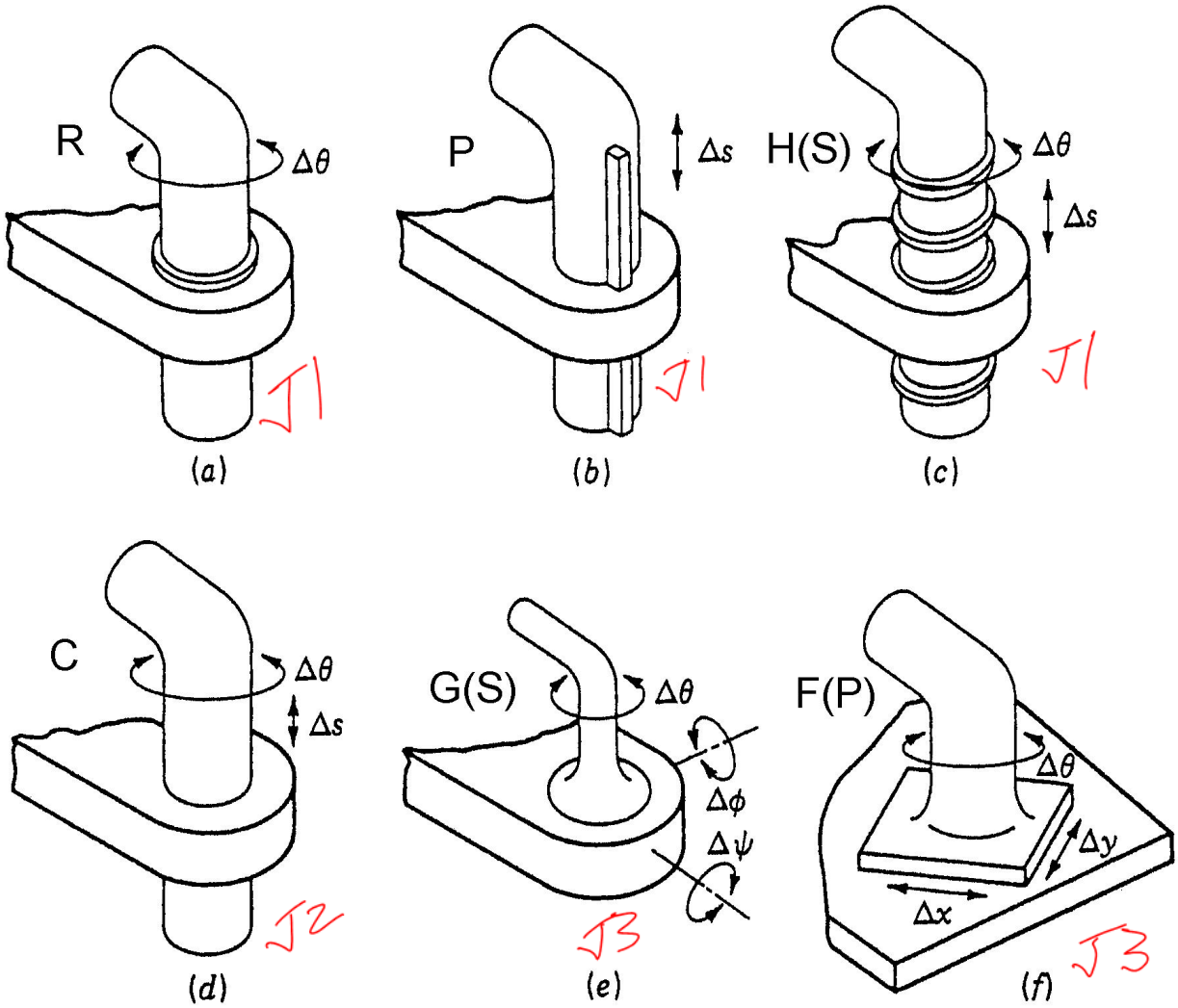

			Restricts	Allows
sph, two dof-1	Revolute	R	5	1
dof-1, dof-2	Prismatic	P	5	1
dof-1, dof-2	Helical (Screw)	H(S)	5	1
dof-1, dof-2	Cylindrical	C	4	2
sph, dof-1	Universal (Hooke)	U(H)	4	2
spherical	Globe (Spherical)	G(S)	3	3
	Flat (Planar)	F(P)	3	3

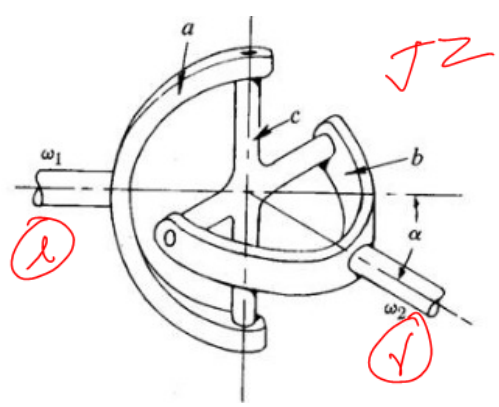

3D mobility
M = 6 nML - 5 nJ1 - 4 nJ2 - 3 nJ3

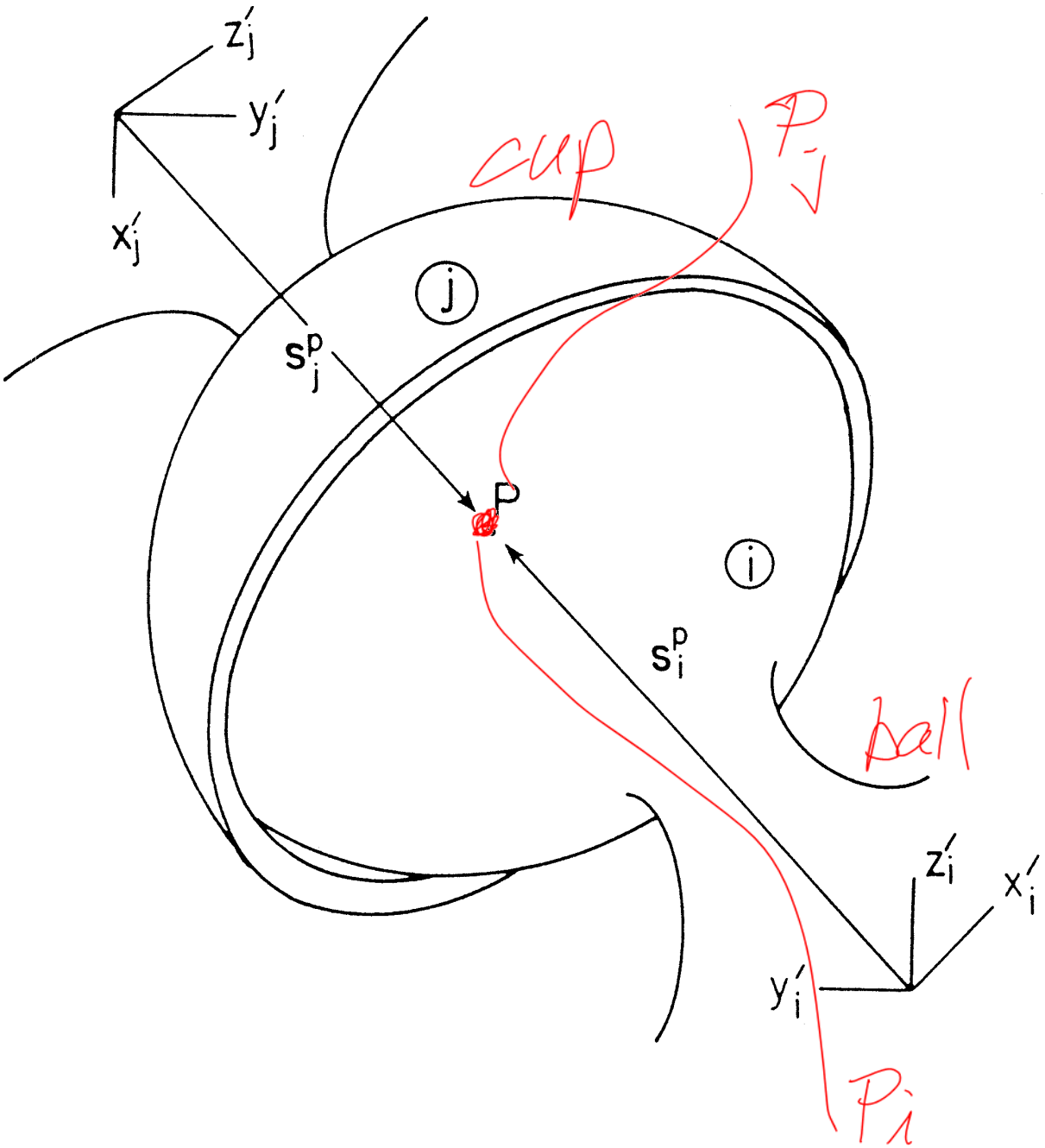

Spherical S (Globe G)

$$\{r_j\}^P - \{r_i\}^P = \{0_{3\times 1}\}$$

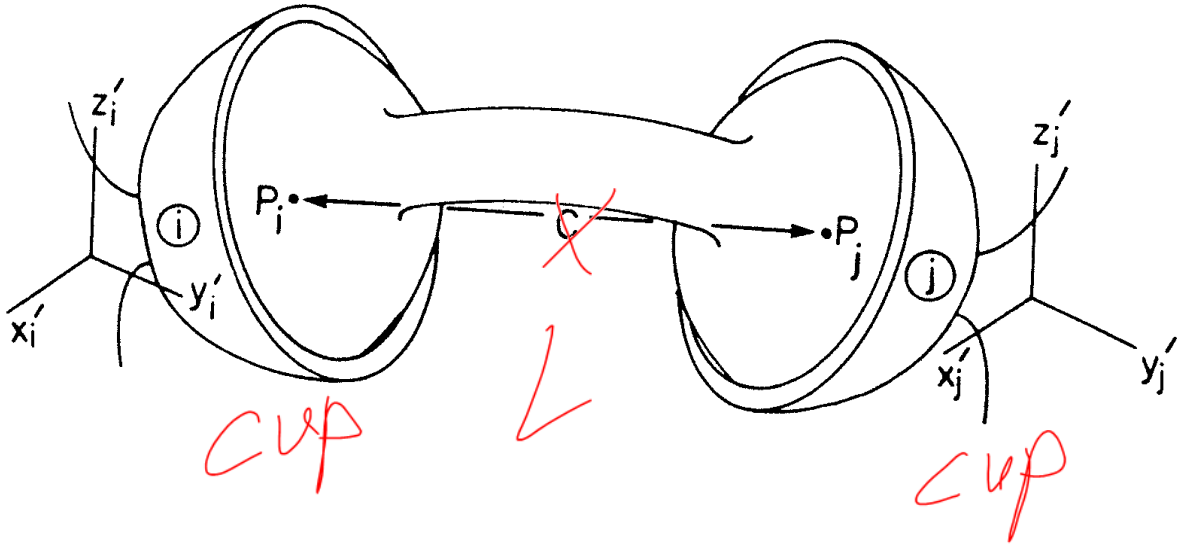

Double Spherical SS

fourth $z_i'' \perp z_j''$

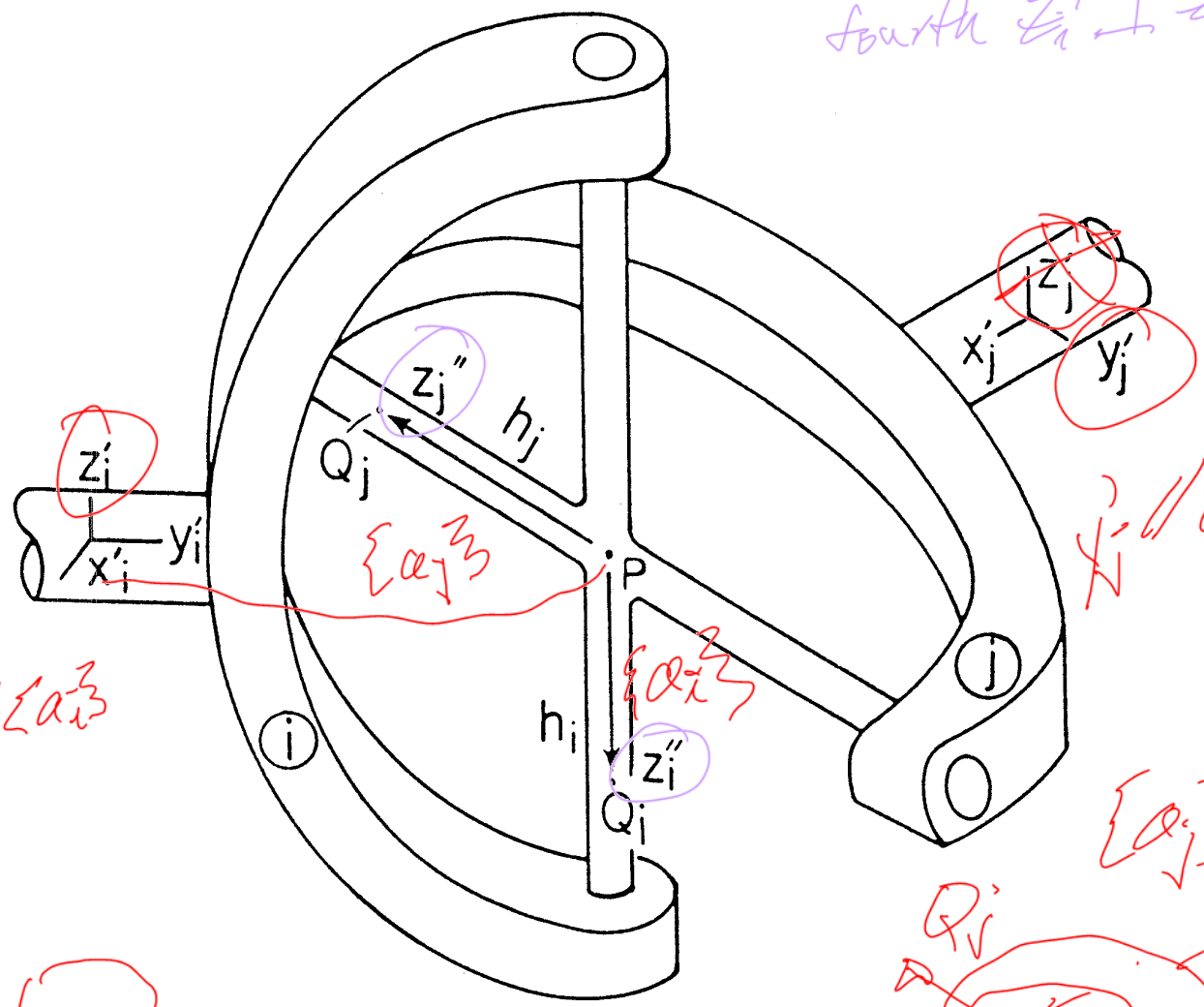

$x_j' \parallel \{a_j\}$

$z_i' \parallel \{a_i\}$

$\{a_j\}$

Q_j

P_j

P_i

Q_i

$\{a_i\}$

Universal U (Hooke H)

$$\{r_j\}^P - \{r_i\}^P = \{0_{3\times1}\}$$

3

$\{a_i\} \perp \{a_j\}$

$z_i'' \perp x_j'$

$$\{a_i\}^T \{a_j\} = 0$$

$\{\hat{x}_i\}^T \{\hat{y}_j\} = 0$

1

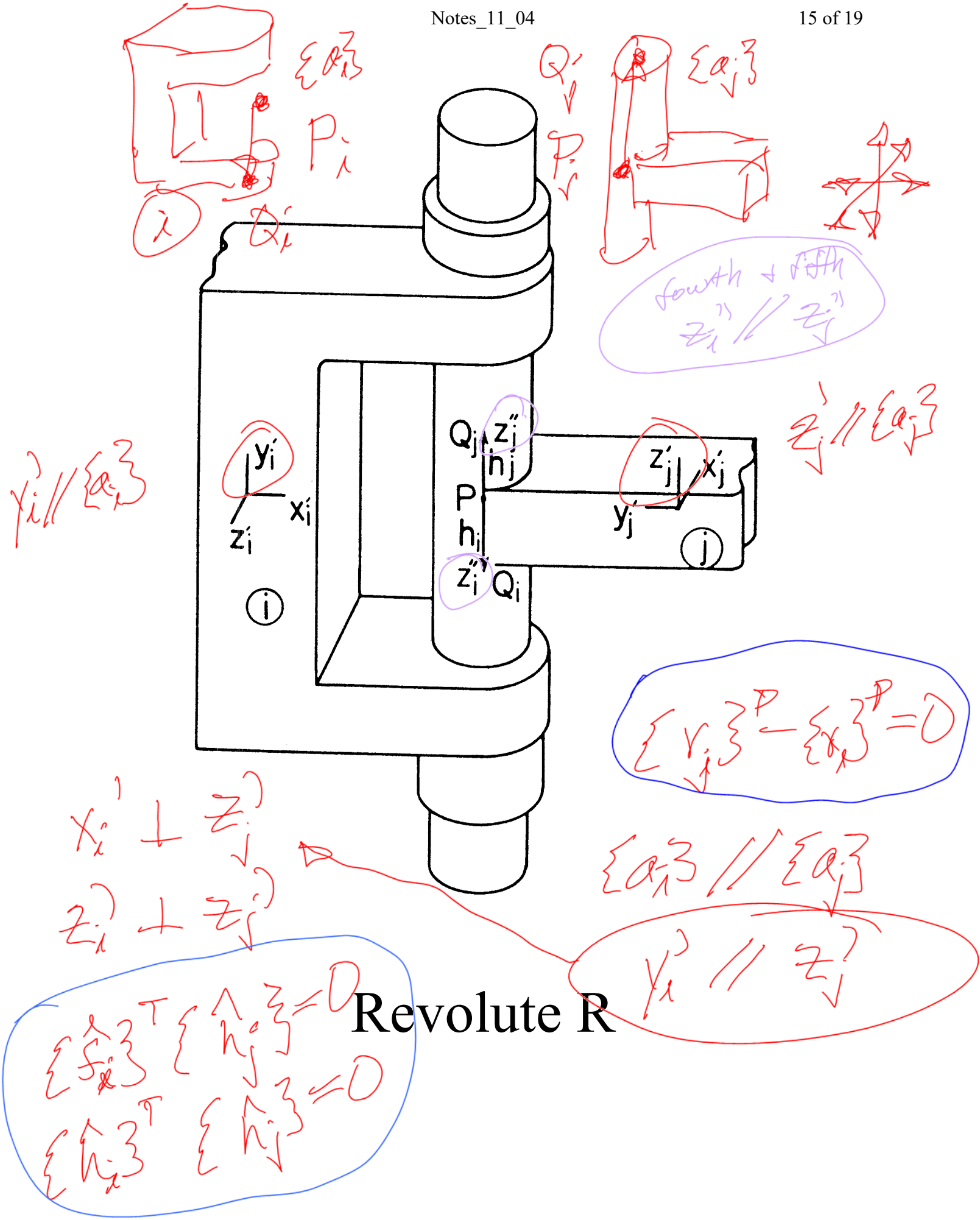
$\{a_i\}$
P_i
Q_i
i
Q_j
$\{a_j\}$
P_j
fourth + fifth
$z_i'' \parallel z_j''$
$z_j' \parallel \{a_j\}$
$y_i' \parallel \{a_i\}$
y_i'
x_i'
z_i'
Q_j
z_j''
h_j
P
h_i
z_i''
Q_i
z_j'
x_j'
y_j'
j
i
$\{r_j\}^P - \{r_i\}^P = 0$
$x_i' \perp z_j'$
$z_i' \perp z_j'$
$\{a_i\} \parallel \{a_j\}$
$y_i' \parallel z_j'$
$\{\hat{s}_i\}^T \{\hat{n}_j\} = 0$
$\{\hat{n}_i\}^T \{\hat{n}_j\} = 0$
Revolute R

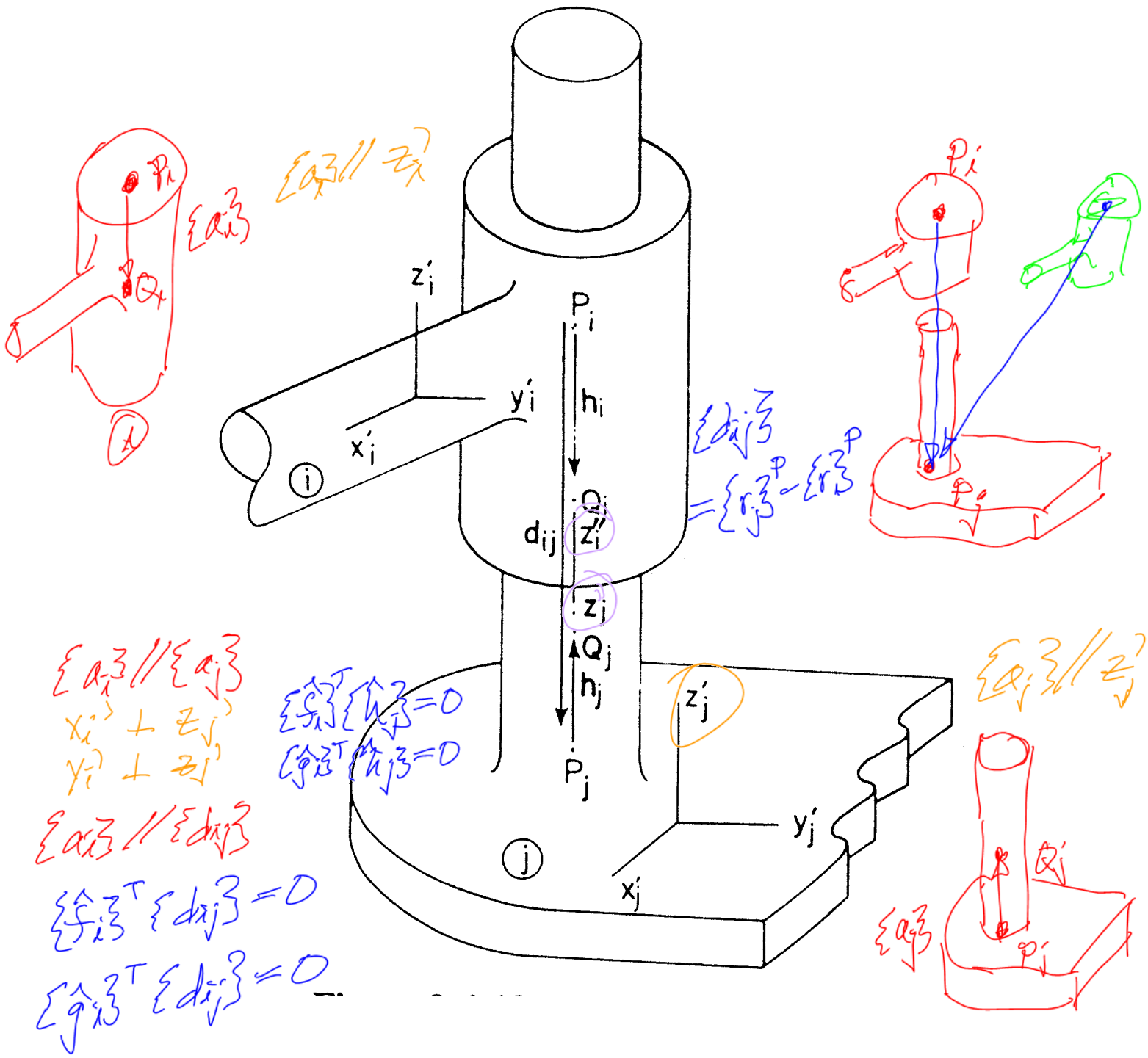

Cylindrical C

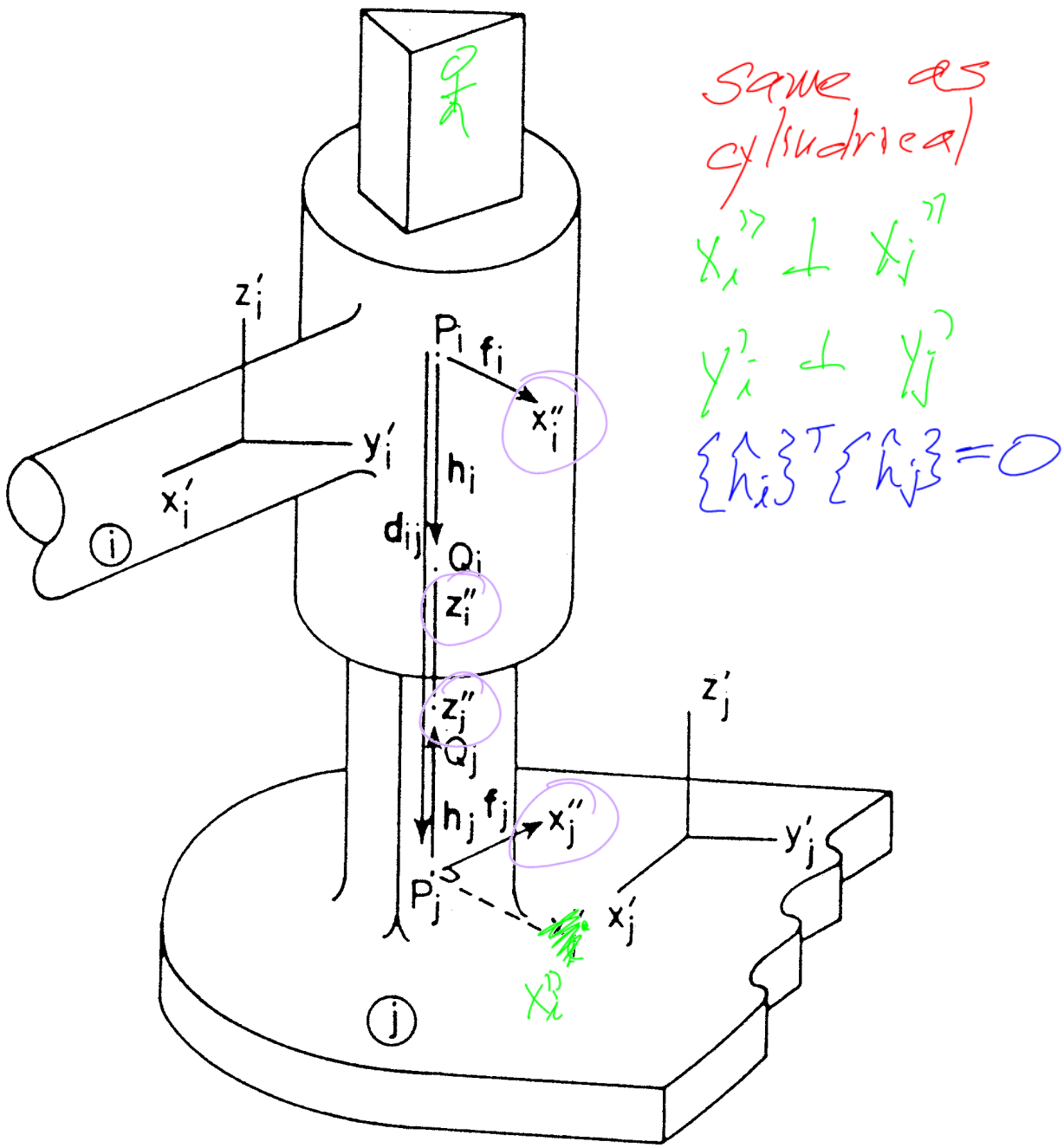

Prismatic P (Translational T)

$|\{d_{ij}\}| = n\theta * d_0$

same as prismatic

angle between $\{x_i\}''$ and $\{x_j\}''$ is function $|\{d_{ij}\}|$

$\{\hat{n}_i\}^T \{\hat{n}_j\} = \cos\theta$

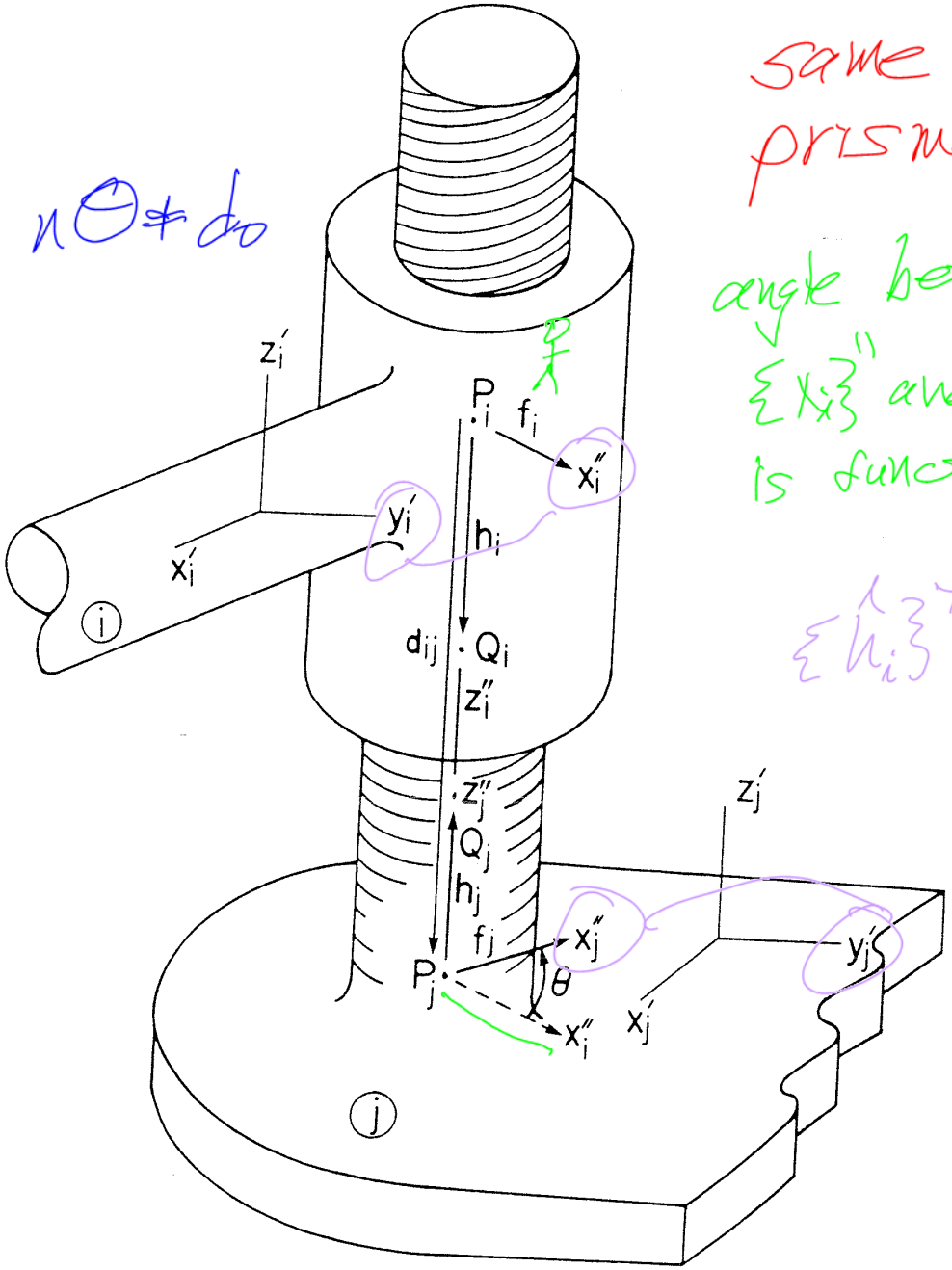

Figure 9.4.22 ...

Screw S (Helical H)

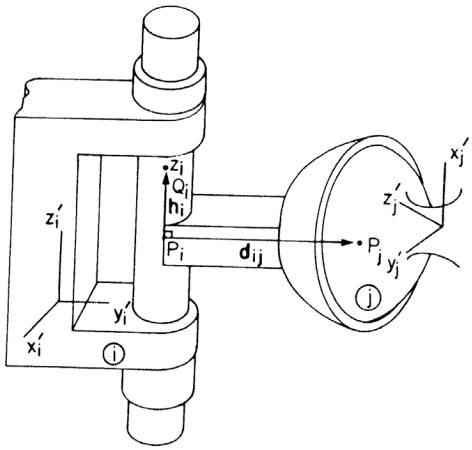
z_i
Q_i
h_i
z_i'
P_i
d_ij
P_j
x_j'
z_j'
y_j'
y_i'
x_i'
i
j

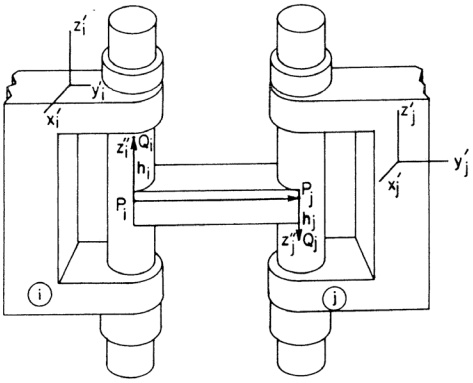
z_i'
y_i'
x_i'
z_i''
Q_i
h_i
P_i
P_j
h_j
z_j''
Q_j
z_j'
y_j'
x_j'
i
j

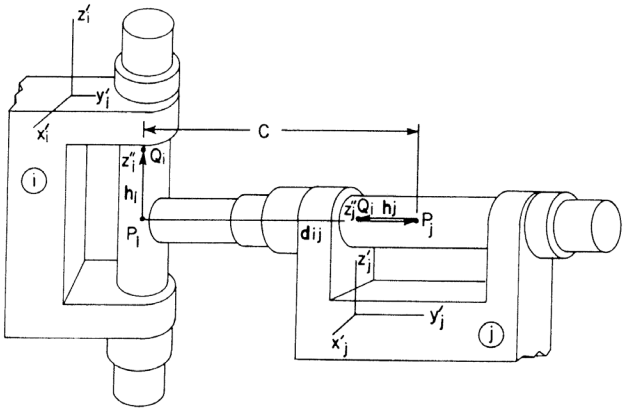
z_i'
y_i'
x_i'
C
z_i''
Q_i
h_i
P_i
d_ij
z_j''
Q_j
h_j
P_j
z_j'
y_j'
x_j'
i
j

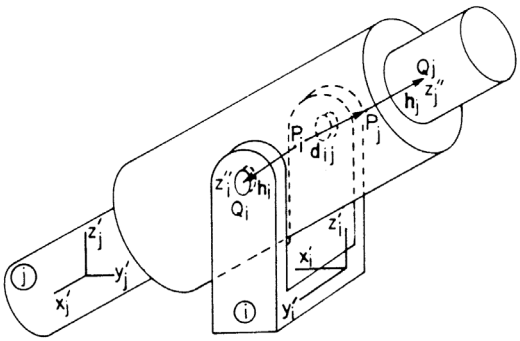
Q_j
z_j''
h_j
P_j
P_i
d_ij
z_i''
h_i
Q_i
z_j'
y_j'
x_j'
z_i'
x_i'
y_i'
j
i

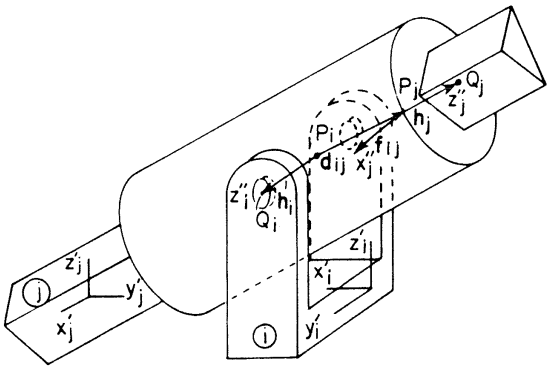
P_j
Q_j
z_j''
h_j
P_i
d_ij
x_j'
f_ij
z_i''
h_i
Q_i
z_j'
y_j'
x_j'
z_i'
x_i'
y_i'
j
i